FINAL SUBDIVISION AND LAND DEVELOPMENT PLAN

FOR

SHIRTZ FARM

EAST WHITELAND TOWNSHIP, CHESTER COUNTY, PENNSYLVANIA

JULY 21, 2014
REVISED: FEBRUARY 8, 2019

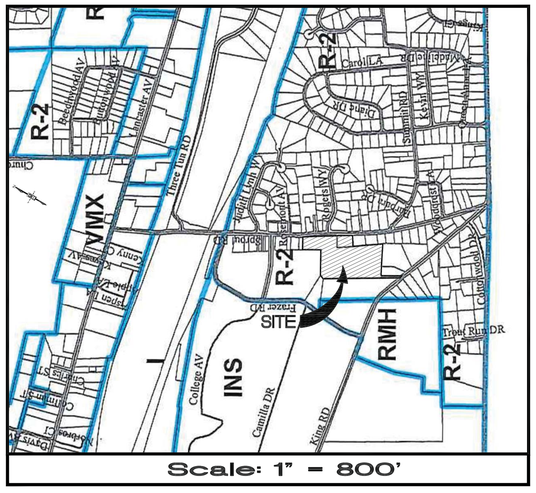

SHEET INDEX	
SHEET NUMBER	DESCRIPTION
01	COVER SHEET
02	RECORD PLAN
03	EXISTING FEATURES PLAN
04	DEMOLITION PLAN
05	GRADING PLAN
06	UTILITY PLAN
07	LOW PRESSURE SANITARY SEWER PLAN & PROFILES (1 OF 2)
08	LOW PRESSURE SANITARY SEWER PLAN & PROFILES (2 OF 2)
09	STORM SEWER PROFILES
10	POST-CONSTRUCTION STORMWATER MANAGEMENT PLAN
11	POST-CONSTRUCTION STORMWATER MANAGEMENT DETAILS (1 OF 3)
12	POST-CONSTRUCTION STORMWATER MANAGEMENT DETAILS (2 OF 3)
13	POST-CONSTRUCTION STORMWATER MANAGEMENT DETAILS (3 OF 3)
14	POST-DEVELOPMENT DRAINAGE AREA PLAN
15	PRE-DEVELOPMENT DRAINAGE AREA PLAN
16	INLET DRAINAGE AREA PLAN
17	EROSION AND SEDIMENTATION CONTROL PLAN
18	EROSION AND SEDIMENTATION CONROL NOTES
19	EROSION AND SEDIMENTATION CONROL DETAILS
20	CONSTRUCTION DETAILS (1 OF 2)
21	CONSTRUCTION DETAILS (2 OF 2)
22	LOW PRESSURE SANITARY SEWER DETAILS (1 OF 2)
23	LOW PRESSURE SANITARY SEWER DETAILS (2 OF 2)
24	LANDSCAPING PLAN

ACT NUMBER 287 OF 1974 as AMENDED UTILITY USER LIST

AQUA PENNSYLVANIA, INC.
700 W. SPROUL ROAD
SPRINGFIELD, PA 19064
CONTACT: JOSEPH M. CILIBERTI
PHONE: (484) 470-1075

COMCAST CABLE COMM., INC.
110 SPRINGBROOKE BLVD.
ASTON, PA 19014
CONTACT: DAN CLARK
PHONE: (877) 537-8411

EAST WHITELAND TOWNSHIP
209 CONESTOGA ROAD
MALVERN, PA 19355
CONTACT: TERRY H. WOODMAN
PHONE: (610) 648-0600

PECO ENERGY
3628 HORIZON DRIVE, DELONFILE
KING OF PRUSSIA, PA 19406
CONTACT: SUSAN TERREY
PHONE: (215) 956-3182

VALLEY FORGE SEWER AUTHORITY
333 PAWLING ROAD
PHOENIXVILLE, PA 19460
CONTACT: STEPHEN YUHAS
PHONE: (610) 983-9684

VERIZON PENNSYLVANIA, INC.
900 RACE STREET, 6TH FLOOR
PHILADELPHIA, PA 19107
CONTACT: JOSEPH SCELSA
PHONE: (610) 280-5586

PROJECT SERIAL No. : 20182490802

BEFORE YOU DIG ANYWHERE

IN... **PENNSYLVANIA**

STOP! CALL 1-800-242-1776
(TOLL FREE)

PA LAW REQUIRES 3 WORKING DAYS NOTICE
BEFORE YOU EXCAVATE OR DESIGN
WORKING DAYS NOTICE IN CESSION STAGE
PENNSYLVANIA ONE CALL SYSTEM, Inc.

ALL TRENCHING, SHEETING AND SHORING
SHALL BE IN STRICT ACCORDANCE
WITH OSHA STANDARDS.

APPLICANT/EQUITABLE OWNER:
WOODSTONE DEVELOPMENT COMPANY, LP
70 POTTSTOWN PIKE, SUITE 100
CHESTER SPRINGS, PA 19425

SITE ADDRESS:
110 SPROUL ROAD
MALVERN, PA 19355

PARCEL(S) IDENTIFIER & DEED REFERENCE:
TAX PARCEL #42 07 009 AND 42 07 0010

TRACT DATA:
GROSS TRACT AREA: 10.26 ACRES
NET TRACT AREA: 9.83 ACRES

REV.	DATE	DESCRIPTION	BY
3	2/8/2019	REVISE PLAN PER TOWNSHIP CONSULTANT REVIEWS, NPDES PERMIT REVIEW	E.J.J.
2	10/5/2018	REVISED GRADING; REVISED SANITARY SEWER DESIGN; REVISED SWM	E.J.J.
1	9/10/2014	REVISED PER TWP 8-11-14 AND 8-18-14 REVIEW LETTERS	E.J.J.

KELLY & CLOSE ENGINEERS
CONSULTING ENGINEERS & SURVEYORS
The Summit at Brandywine
1786 Wilmington Pike/Suite 300
Glen Mills, Pennsylvania 19342
610.358.9363 fax 610.358.9376

ORIGINAL PLANS BEAR A REGISTRATION SEAL IN RED INK

COMMONWEALTH OF PENNSYLVANIA
REGISTERED PROFESSIONAL
ERIC J. JANETKA
ENGINEER
No. 060548
REGISTERED ENGINEER

SHEET 01 of 24

IMPORTANT – CONSTRUCTION SEQUENCE NOTE: PRIOR TO ABANDONMENT AND REMOVAL OF EXISTING ON–LOT SEPTIC SYSTEM CURRENTLY SERVING DWELLING ON LOT 2, THE LOW PRESSURE SEWER SYSTEM MUST BE CONSTRUCTED, TESTED AND OPERATIONAL (UP TO THE LOCATION OF PROPOSED LOT 2 LATERAL), AND THE LATERAL AND GRINDER PUMP (FOR LOT 2) INSTALLED AND FUNCTIONING. THE EXACT LOCATION OF THE ON–LOT SEPTIC SYSTEM (TANKS, LATERAL AND SEEPAGE AREA) WAS NOT ABLE TO BE DETERMINED FROM ON–SITE INSPECTION AND REVIEW OF HISTORICAL RECORDS. IT IS POSSIBLE, THE ENTIRE SYSTEM IS LOCATED WITHIN THE PROPOSED BOUNDARY OF LOT 2, BUT THIS MUST BE VERIFIED PRIOR TO DECOMMISSIONING THE SYSTEM SERVING THE EXISTING DWELLING ON LOT 2. ALL ON–LOT SEPTIC SYSTEM COMPONENTS FOR BOTH EXISTING DWELLINGS MUST BE LOCATED AND REMOVED/ABANDONED IN ACCORDANCE WITH STATE AND LOCAL REGULATIONS.

SIGHT DISTANCE NOTE: REFER TO PENNDOT HIGHWAY OCCUPANCY PERMIT PLAN FOR MORE INFORMATION PERTAINING TO SIGHT DISTANCE. POSTED SPEED LIMIT IS 35 MPH. 85TH PERCENTILE SPEED IS 37 MPH. ALL SIGHT DISTANCE OBSTRUCTIONS (INCLUDING BUT NOT LIMITED TO EMBANKMENTS AND VEGETATION) SHALL BE REMOVED BY THE DEVELOPER (PERMITEE) TO PROVIDE A MINIMUM OF 385' OF SIGHT DISTANCE TO THE LEFT AND 440' OF SIGHT DISTANCE TO THE RIGHT FOR A DRIVER EXITING THE PROPOSED INTERSECTION ONTO THE THROUGH HIGHWAY. THE DRIVER MUST BE CONSIDERED TO BE POSITIONED 10 FEET FROM THE NEAR EDGE OF THE CLOSEST HIGHWAY THROUGH TRAVEL LANE (FROM THE CURB LINE IF CURBING IS PRESENT) AT AN EYE HEIGHT OF 3'–6" ABOVE PAVED SURFACE. THE POINT SIGHTED BY THE EXITING DRIVER SHALL ALSO BE 3'–6" ABOVE THE PAVED SURFACE LOCATED IN THE CENTER OF THE CLOSEST HIGHWAY TRAVEL LANE DESIGNATED FOR USE BY THE APPROACHING TRAFFIC. THE SIGHT DISTANCE SHALL BE MAINTAINED BY THE PERMITEE.

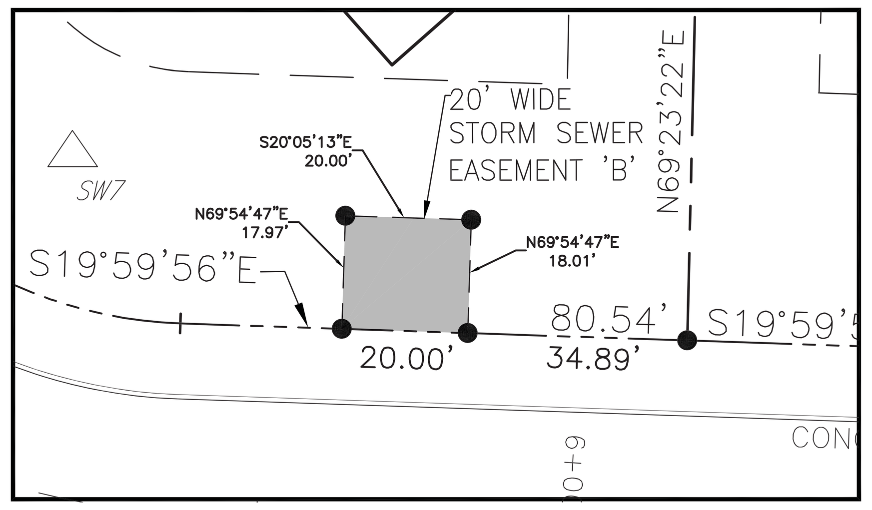

STORM SEWER EASEMENT 'B'
SCALE: 1" = 20'

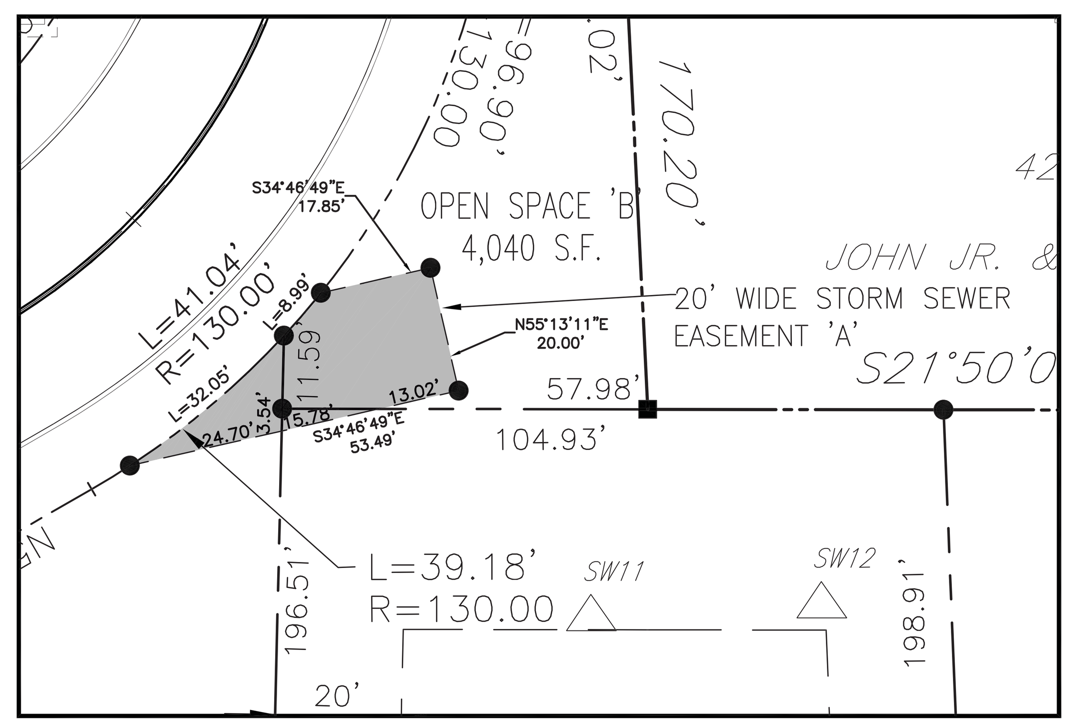

STORM SEWER EASEMENT 'A'
SCALE: 1" = 20'

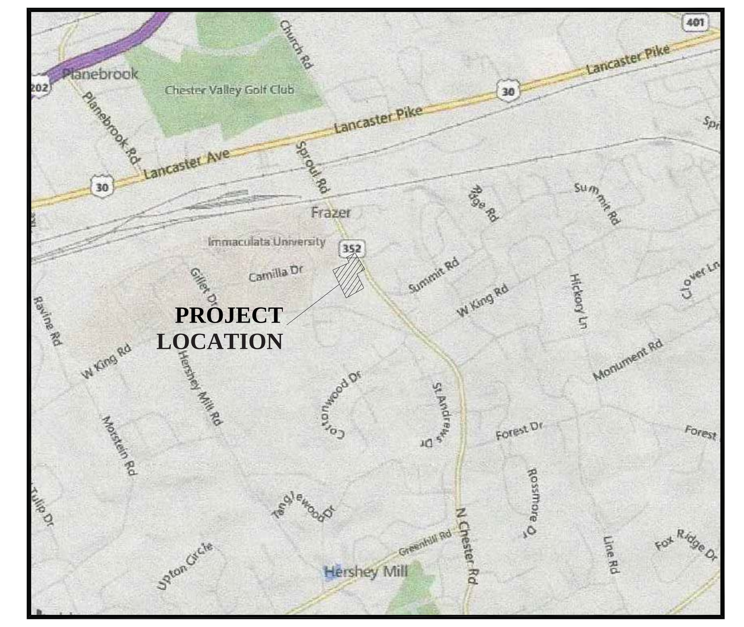

LOCATION MAP

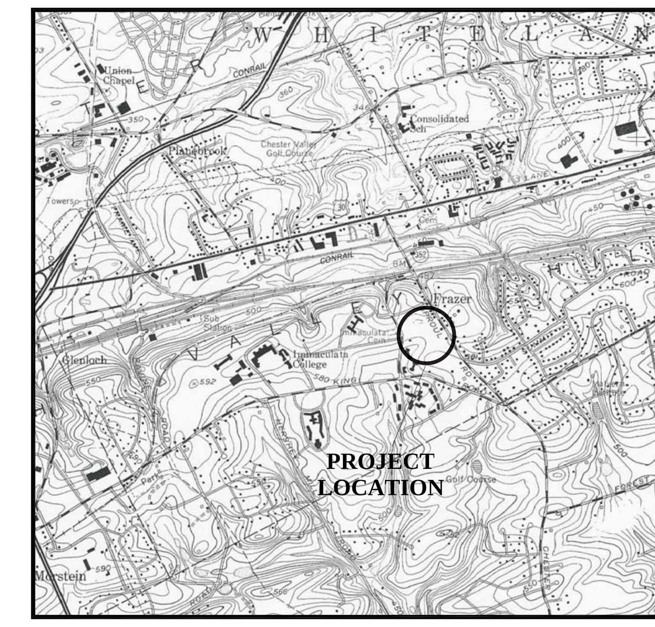

U.S.G.S. MAP

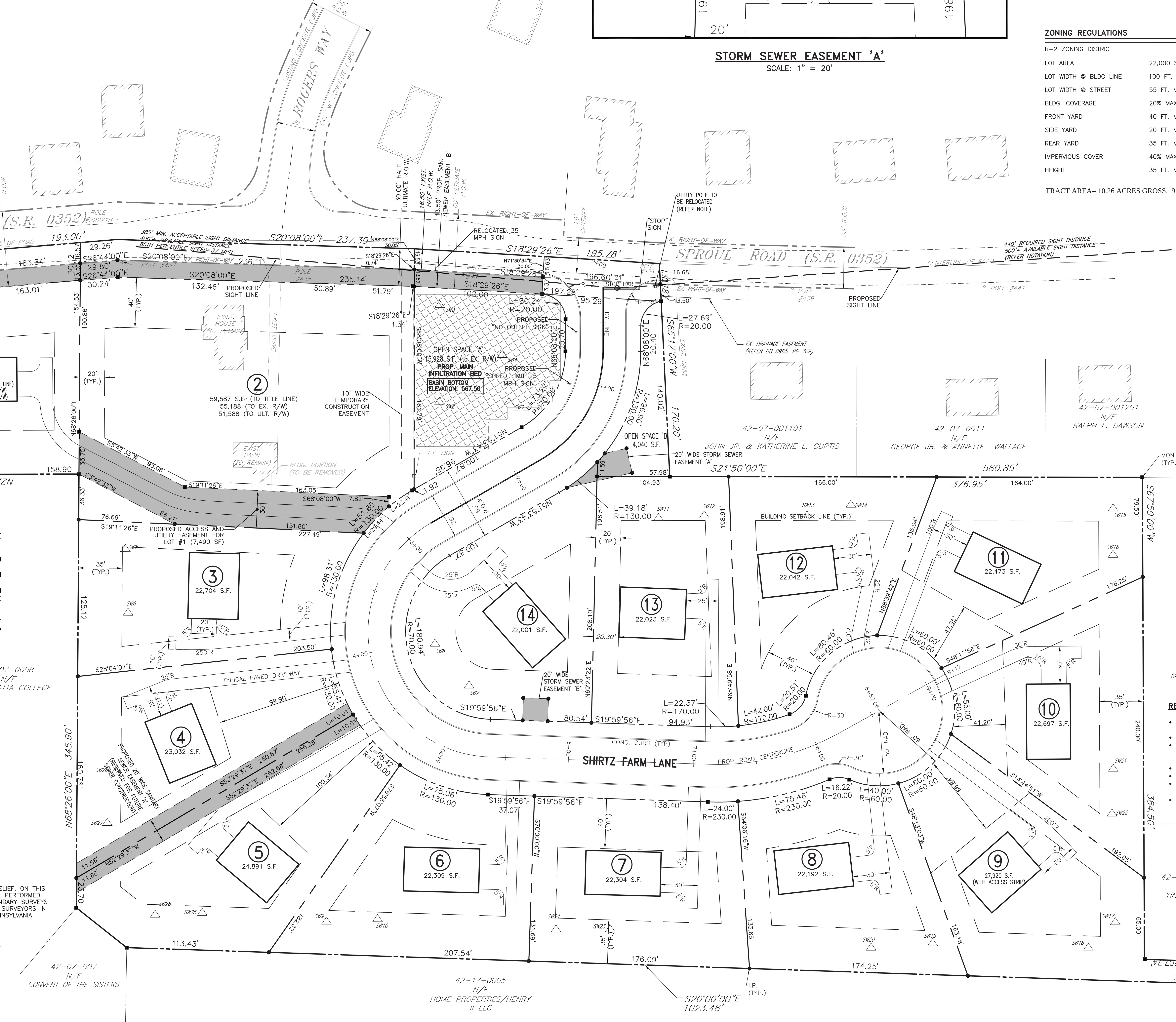

ZONING REGULATIONS

R–2 ZONING DISTRICT	
LOT AREA	22,000 S.F. MIN.
LOT WIDTH @ BLDG LINE	100 FT. MIN.
LOT WIDTH @ STREET	55 FT. MIN.
BLDG. COVERAGE	20% MAX.
FRONT YARD	40 FT. MIN.
SIDE YARD	20 FT. MIN.
REAR YARD	35 FT. MIN.
IMPERVIOUS COVER	40% MAX.
HEIGHT	35 FT. MAX.

TRACT AREA= 10.26 ACRES GROSS, 9.83 ACRES NET

PROJECT NOTES:

1. BOUNDARY SHOWN AS PER A SURVEY BY RKW ENGINEERING SERVICES, INC. AND SHOWN ON A RECORD PLAN FOR PROJECT 02044 DATED 7/21/14 AND LAST REVISED 9/10/14. KELLY & CLOSE ENGINEERS PERFORMED A BOUNDARY SETTLEMENT SURVEY TO CONFIRM ACCURACY OF RKW PLAN.
2. EXISTING FEATURES SHOWN AS PER AN EXISTING CONDITIONS PLAN FOR PROJECT 02044 DATED 7/21/14 BY RKW ENGINEERING SERVICE AND BEING SHEET 2A. KELLY & CLOSE ENGINEERS PERFORMED ADDITIONAL SUPPLEMENTAL TOPOGRAPHIC SURVEYS AND VERTICAL INFORMATION SHOWN ON REFERENCE PLAN.
3. SURVEY PERFORMED WITHOUT THE BENEFIT OF A TITLE SEARCH AND SUBJECT TO RESTRICTIONS AND EASEMENT OF RECORD.
4. PHYSICAL FEATURES FROM SURVEY BY RKW ENGINEERING SERVICES, INC. FEB. 2000, NOV. 2003, AUG. 2004.
5. ELEVATIONS BASED ON USGS VERTICAL DATUM.
6. NO VARIANCES ARE REQUIRED.
7. ALL LOTS HAVE AN ERROR OF CLOSURE OF LESS THAN 1:50,000.
8. SHIRTZ FARM HOMEOWNERS ASSOCIATION (SFHA) WILL BE CREATED FOR OWNERSHIP AND MAINTENANCE OF OPEN SPACE 'A' AND OPEN SPACE 'B'. PROPOSED LOT 1 AND LOT 2 WILL NOT BE IN THE SFHA.
9. OPEN SPACE 'A' AND OPEN SPACE 'B' ARE NOT BUILDING/DWELLING LOTS.
10. A HIGHWAY OCCUPANCY PERMIT MUST BE OBTAINED FROM PADOT FOR THE PROPOSED ROADWAY.
11. AQUA PENNSYLVANIA HAS VERIFIED THAT ADEQUATE WATER SUPPLY IS AVAILABLE.
12. TAX PARCELS 42 07 0009 AND 42 07 0010 ARE TO BE COMBINED TO FORM A SINGLE PARCEL AND THEN RE–SUBDIVIDED INTO FOURTEEN LOTS.
13. PROPOSED ROAD AND RIGHT–OF–WAY OF SHIRTZ FARM LANE IS OFFERED FOR DEDICATION TO EAST WHITELAND TOWNSHIP.
14. PROPOSED SANITARY SEWER EASEMENT 'A' (20' WIDE) AND EASEMENT 'B' (13.5' WIDE) AND ALL FACILITIES WITHIN, ARE OFFERED FOR DEDICATION TO EAST WHITELAND TOWNSHIP. NOTHING SHALL BE PUT OR PLACED WITHIN EASEMENT AREAS AND ALTERATION OF THE EASEMENT AREA OR FACILITIES WITHIN IS NOT PERMITTED WITHOUT WRITTEN APPROVAL OF EAST WHITELAND TOWNSHIP. THE SURFACE OF SANITARY SEWER EASEMENT AREAS SHALL BE MAINTAINED BY THE INDIVIDUAL LOT OWNERS OR SFHA, WHICHEVER THE CASE MAY BE.
 - 14.1. SANITARY SEWER FACILITIES INCLUDING BUT NOT LIMITED TO LOW PRESSURE SANITARY SEWER (LPSS) MAINS, FLUSHING STATIONS/CLEAN–OUTS, LOCATOR STATIONS AND LATERAL CONNECTIONS LOCATED WITHIN ROAD RIGHT–OF–WAYS (EXISTING 33' WIDE SPROUL ROAD, EXISTING 50' WIDE ROGERS WAY AND 60' WIDE SHIRTZ FARM LANE TO BE DEDICATED TO EAST WHITELAND TOWNSHIP) AND SANITARY SEWER EASEMENTS (20' WIDE EASEMENT "A" AND 13.5' WIDE EASEMENT "B" TO BE DEDICATED TO EAST WHITELAND TOWNSHIP) SHALL BE OWNED AND MAINTAINED BY EAST WHITELAND TOWNSHIP. SANITARY SEWER FACILITIES MAINTENANCE RESPONSIBILITY OF EAST WHITELAND TOWNSHIP SHALL TERMINATE AT SHUTOFF VALVES LOCATED AT THE BOUNDARY OF ROAD RIGHT–OF–WAYS OR SANITARY SEWER EASEMENTS MENTIONED ABOVE AS APPLICABLE.
 - 14.2. SANITARY SEWER FACILITIES INCLUDING BUT NOT LIMITED TO GRINDER PUMP STATIONS, LATERALS AND CLEANOUTS, LOCATED ON PROPOSED LOTS, SHALL BE OWNED AND MAINTAINED BY APPLICABLE LOT OWNERS.
15. NO STRUCTURES OR PLANTING MAY BE INSTALLED WITHIN THE SANITARY SEWER EASEMENTS 'A' AND 'B' ON LOT 1, 2, 4 OR 5. ANY PLANTINGS OR STRUCTURES WITHIN THE SANITARY SEWER EASEMENT SHALL BE REMOVED BY THE LOT OWNER AT NO COST TO EAST WHITELAND TOWNSHIP UPON NOTICE FROM EAST WHITELAND TOWNSHIP TO DO SO.
16. EXISTING TREES WITHIN THE PROPOSED SANITARY SEWER EASEMENT 'B' (13.5' WIDE) ALONG THE FRONTAGE OF LOT 1, LOT 2 AND OPEN SPACE 'A', ARE TO REMAIN (EXCEPT WHERE SHOWN TO BE REMOVED ON THE DEMOLITION PLAN). HOWEVER, EAST WHITELAND TWP. RESERVES THE RIGHT IN THE FUTURE TO REMOVE EXISTING TREES FOR PUBLIC SEWER INSTALLATION.
17. ACCESS AND UTILITY EASEMENT (30' WIDE) OVER LOT 2 SHALL BE PERPETUALLY IN FAVOR OF LOT 1 FOR DRIVEWAY CONSTRUCTION, UTILITY CONSTRUCTION AND ACCESS FROM SHIRTZ FARM LANE TO LOT 1. EASEMENT SURFACE SHALL BE MAINTAINED BY LOT 1, INCLUDING BUT NOT LIMITED TO SURFACE DRAINAGE FEATURES, PAVED DRIVEWAY AND UTILITIES. THE AREA WITHIN THE EASEMENT MAY NOT BE ALTERED BY LOT 1 (EXCEPT IN MAINTAINING THE ABOVE IDENTIFIED IMPROVEMENTS) WITHOUT THE APPROVAL OF LOT 2. NO TREES WITHIN THE EASEMENT MAY BE REMOVED (EXCEPT AS OTHERWISE SHOWN ON THE DEMOLITION PLAN OF THE SUBDIVISION) BY THE OWNER OF LOT 1. LOT 2 SHALL HAVE THE RIGHT TO ACCESS THEIR PROPERTY THROUGH THE EASEMENT AREA, INCLUDING FUTURE DRIVEWAY CONNECTION TO LOT 2 IF SO DESIRED (SUBJECT TO WRITTEN APPROVAL TO DO SO BY EAST WHITELAND TOWNSHIP). MAINTENANCE OF THE AREA WITHIN THE EASEMENT SHALL BE THE JOINT RESPONSIBILITY OF LOT 1 AND LOT 2 (FROM THE INTERSECTION OF LOT 2 DRIVEWAY AND LOT 1 DRIVEWAY, TO SHIRTS FARM LANE) AT TIME OF CONSTRUCTION OF DRIVEWAY TO ACCESS LOT 2 (FROM THE EASEMENT AREA).
18. THE APPLICANT SHALL PROVIDE A FEE–IN–LIEU OF PARK LAND IN THE AMOUNT OF $21,000.00.
19. FINAL PLAN APPROVED BY EAST WHITELAND TOWNSHIP BOARD OF SUPERVISORS ON SEPTEMBER 10, 2014.
20. WOODSTONE DEVELOPMENT COMPANY, LP SHALL INSTALL GRINDER PUMP AND LATERAL CONNECTION TO THE PROPOSED LOW–PRESSURE SEWER SYSTEM (LPSS) FOR LOT 2. THIS SHALL BE ACCOMPLISHED PRIOR TO ABANDONING THE EXISTING ON–LOT SANITARY SEWER DISPOSAL SYSTEM THAT CURRENTLY SERVES THE EXISTING HOME TO REMAIN.
21. EXISTING ON–LOT SANITARY SEWER SYSTEM SERVING BOTH EXISTING HOMES, MUST BE ABANDONED IN ACCORDANCE WITH LOCAL, STATE AND COUNTY REGULATIONS. THE EXISTING ON–LOT SEWER SYSTEM THAT SERVES THE HOME THAT IS TO REMAIN ON LOT 2, MUST BE ABANDONED, ONLY AFTER CONNECTION OF THAT HOME TO THE PROPOSED LPSS.
22. GRINDER PUMP AND SANITARY SEWER LATERAL FOR LOT 1 SHALL BE INSTALLED BY THE OWNER OF LOT 1, IN THE FUTURE, AT TIME OF DEVELOPMENT OF LOT 1. AS PART OF THIS SUBDIVISION, WOODSTONE DEVELOPMENT COMPANY, LP SHALL INSTALL THE SANITARY SEWER LATERAL FOR LOT 1, TO THE RIGHT OF WAY OF SHIRTZ FARM LANE, WHERE IT WILL BE CAPPED ON THE OTHER SIDE OF THE SHUT–OFF VALVE TO ALLOW FUTURE CONNECTION BY THE OWNER OF LOT 1.
23. PROPOSED CONCRETE MONUMENTS AND IRON PINS ALONG THE OUT–BOUNDARY OF THE ORIGINAL PARCEL(S) SHALL BE INSTALLED AND CERTIFIED BY A PROFESSIONAL LAND SURVEYOR LICENSED IN THE COMMONWEALTH OF PENNSYLVANIA, PRIOR TO RECORDATION OF THE SUBDIVISION PLAN.
24. INDIVIDUAL LOT CORNER PINS AND CONCRETE MONUMENTS, AND EASEMENT BOUNDARY CORNER MARKERS, SHALL BE INSTALLED UPON COMPLETION OF LOT IMPROVEMENTS AND GRADING, FOR EACH LOT, PRIOR TO ISSUANCE OF CERTIFICATE OF OCCUPANCY FOR THAT LOT.
25. PROPOSED WATER SERVICE FOR LOT 1 SHALL BE INSTALLED BY THE OWNER OF LOT 1 AT TIME OF DEVELOPMENT OF LOT 1. THERE IS NO NEW WATER SERVICE PROPOSED FOR LOT 2. THE EXISTING HOME ON LOT 2 IS ALREADY CONNECTED TO THE PUBLIC WATER SYSTEM.
26. LOT 1 AND LOT 2 ARE TO BE OWNED BY THE ESTATE OF JEANNINE M. SHIRTZ, JEANNINE H. SCHAEFER, EXECUTRIX (THE OWNER OF THE PROPERTY AT TIME OF 2014 FINAL PLAN APPROVAL BY EAST WHITELAND TOWNSHIP), 110 SPROUL ROAD, MALVERN, PENNSYLVANIA.
27. ALL IMPROVEMENT SHOWN ON THE PLAN WITHIN THE BOUNDARIES OF PROPOSED LOT 1 AND LOT 2 ARE TO BE COMPLETED BY THE ESTATE OF JEANNINE M. SHIRTZ. ALL OTHER IMPROVEMENTS SHOWN ON THE SUBDIVISION PLAN FOR LOTS 3 THROUGH 14 AND OPEN SPACE 'A' AND OPEN SPACE 'B' ARE TO BE COMPLETED BY WOODSTONE DEVELOPMENT COMPANY, LP..
28. DRIVEWAY DEPRESSION FOR LOT 1 SHALL BE INSTALLED BY WOODSTONE DEVELOPMENT COMPANY.
29. POTION OF BUILDING ON LOT 2 TO BE REMOVED WILL BE ACCOMPLISHED AT TIME OF DEVELOPMENT OF LOT 1.

STORMWATER MANAGEMENT, STORM SEWER AND DRAINAGE NOTES:

1. PROPOSED STORM SEWER EASEMENTS (20' WIDE) SHOWN ON THIS PLAN ARE OFFERED FOR DEDICATION TO EAST WHITELAND TOWNSHIP, INCLUDING PROPOSED FACILITIES WITHIN. EASEMENT AREAS SHALL BE MAINTAINED BY INDIVIDUAL LOT OWNERS (OR HOMEOWNERS ASSOCIATION, WHICHEVER THE CASE MAY BE). NOTHING SHALL BE PUT OR PLACED WITHIN EASEMENT AREAS AND ALTERATION OF THE EASEMENT AREA OR STORM SEWER FACILITIES IS NOT PERMITTED WITHOUT WRITTEN APPROVAL OF EAST WHITELAND TOWNSHIP.
2. STORM SEWER FACILITIES WITHIN THE ROADWAY RIGHT–OF–WAY (60 FEET WIDE, TO BE DEDICATED TO EAST WHITELAND TOWNSHIP) SHALL BE OWNED AND MAINTAINED BY EAST WHITELAND TOWNSHIP)
3. OPEN SPACE 'A' (AND ALL FACILITIES WITHIN) SHALL BE OWNED AND MAINTAINED BY THE SFHA (HOMEOWNERS ASSOCIATION).
4. ALL ON–LOT INFILTRATION BASINS/SEEPAGE BEDS AND RELATED FACILITIES SHALL BE OWNED AND MAINTAINED BY THE HOMEOWNERS ASSOCIATION. STORM SEWER AND DRAINAGE FACILITIES SHOWN ON THIS PLAN INCLUDING BUT NOT LIMITED TO PIPE, COLLECTION INLETS, SURFACE SWALES, AMENDED SOILS, CLEANOUTS AND ROOF LEADER PIPE SYSTEMS, MAY NOT BE ALTERED IN ANY WAY WITHOUT THE WRITTEN APPROVAL OF THE HOMEOWNERS ASSOCIATION AND EAST WHITELAND TOWNSHIP.
5. ON–LOT SEEPAGE BASINS ARE DESIGNED BASED ON THE IMPERVIOUS SURFACE TABULATION SHOWN ON THIS PLAN AND ACCOUNT FOR ROOFTOP AND DRIVEWAY SURFACE AREAS AND AN ALLOTMENT OF "MISCELLANEOUS" IMPERVIOUS SURFACE AREA FOR EACH LOT. RUNOFF FROM ALL DRIVEWAYS AND ROOF AREAS MUST BE DISCHARGED TO THE APPLICABLE INFILTRATION BASIN/SEEPAGE BED AS SHOWN ON THE POST–CONSTRUCTION STORMWATER MANAGEMENT PLAN. SURFACE RUNOFF FROM ALL "MISCELLANEOUS" IMPERVIOUS SURFACE AREA MUST BE COLLECTED AND DISCHARGED TO THE ON–LOT SEEPAGE BASINS SHOWN ON THE PLAN (LOTS 1 AND 3 THRU 11). RUNOFF FROM "MISCELLANEOUS" IMPERVIOUS SURFACE AREAS SHALL BE DISCHARGED TO THE MAIN INFILTRATION BASIN ON OPEN SPACE 'A' (LOTS 12, 13, AND 14). THERE IS NO "MISCELLANEOUS" IMPERVIOUS SURFACE AREA ALLOTMENT FOR LOT 2. ANY FUTURE IMPERVIOUS SURFACES CONSTRUCTED ON LOT 2 MUST CONFORM TO EAST WHITELAND TOWNSHIP STORMWATER MANAGEMENT ORDINANCE REQUIREMENTS. THERE WILL BE A NET REDUCTION OF IMPERVIOUS SURFACE ON LOT 2 DUE TO THE REMOVAL OF THE REAR PORTION OF THE BARN.
6. ADDITION OF FUTURE IMPERVIOUS SUFACE AREA ON ANY LOT IN EXCESS OF THE TABULATION SHOWN ON THIS PLAN REQUIRES WRITTEN APPROVAL TO DO SO BY EAST WHITELAND TOWNSHIP (BY WAY OF COMPLIANCE WITH THE STORMWATER MANAGEMENT ORDINANCE).
7. EAST WHITELAND TOWNSHIP RESPONSIBILITY FOR MAINTENANCE OF STORM SEWER PIPE AND COLLECTION INLETS TERMINATES AT THE BOUNDARY BETWEEN OPEN SPACE 'A' AND THE RIGHT–OF–WAY OF SHIRTZ FARM WAY. EAST WHITELAND TOWNSHIP IS GRANTED PERPETUAL ACCESS TO OPEN SPACE 'A', AND PERPETUAL RIGHT TO DISCHARGE STORMWATER RUNOFF FROM SHIRTZ FARM WAY INTO THE UNDERGROUND INFILTRATION BASIN ON OPEN SPACE 'A'.
8. EAST WHITELAND TOWNSHIP AND THEIR DESIGNATED REPRESENTATIVES ARE GRANTED RIGHTS IN PERPETUITY, TO ACCESS ALL STORMWATER MANAGEMENT FACILITIES SHOWN ON THIS PLAN FOR ROUTINE INSPECTION AND/OR EMERGENCY MAINTENANCE IF NECESSARY. EAST WHITELAND TOWNSHIP IS NOT RESPONSIBLE FOR MAINTENANCE AND REPAIRS OF STORMWATER MANAGEMENT FACILITIES SHOWN ON THIS PLAN (EXCEPT THOSE FACILITIES WITHIN THE RIGHT–OF–WAY OF SHIRTZ FARM LANE AND EASEMENTS OFFERED FOR DEDICATION), BUT RESERVES THE RIGHT TO MAKE SUCH REPAIRS AT THE EXPENSE OF THE LOT OWNER AND/OR HOMEOWNERS ASSOCIATIONS SHOULD SUCH FACILITIES NOT BE PROPERLY MAINTAINED.
9. ALL PROPOSED STORMWATER MANAGEMENT FACILITIES WITHIN THE BOUNDARY OF LOT 1 AND LOT 2 WILL BE OWNED AND MAINTAINED, IN PERPETUITY BY THE RESPECTIVE LOT OWNER(S), AS DESCRIBED IN THE NOTATIONS ON THIS PLAN.
10. A BLANKET EASEMENT IS ESTABLISHED IN PERPETUITY OVER ALL PARCELS IN THIS SUBDIVISION TO PERMIT EACH LOT OWNER TO DISCHARGE STORMWATER RUNOFF (FROM THEIR RESPECTIVE LOTS), IN ACCORDANCE WITH THIS PLAN, DOWNGRADE AND OVER ADJOINING PROPERTIES, TO THE COLLECTION AND CONVEYANCE FACILITIES SHOWN ON THIS PLAN (SWALES, STORM SEWER, UNDERGROUND SEEPAGE BASINS).
11. A LOT OWNER MAY NOT UTILIZE THE "MISCELLANEOUS" IMPERVIOUS SURFACE ALLOTTED FOR ANY OTHER LOT, REGARDLESS OF WHETHER RUNOFF FROM THE LOT IS DISCHARGED TO AN UNDERGROUND BASIN SHARED BY MULTIPLE LOTS. ANY ON–LOT IMPERVIOUS SURFACE AREA INSTALLED IN EXCESS OF THE ALLOTMENT SHOWN ON THIS PLAN MAY ONLY BE CONSTRUCTED UPON DEMONSTRATING COMPLIANCE WITHE THE EAST WHITELAND TOWNSHIP STORMWATER MANAGEMENT ORDINANCE.
12. A BLANKET ACCESS EASEMENT IS GRANTED TO EAST WHITELAND TOWNSHIP AND THE CHESTER COUNTY CONSERVATION DISTRICT FOR THE INSPECTION AND POSSIBLE EMERGENCY MAINTENANCE OF STORMWATER MANAGEMENT FACILITIES PER THE PA BMP MANUAL AND THE POST CONSTRUCTION STORMWATER MANAGEMENT PLAN.
13. PRIOR TO CONSTRUCTION OF ANY DWELLING, THE UNDERGROUND INFILTRATION BASIN PROPOSED TO CONTROL RUNOFF FROM THE DWELLING, MUST BE INSTALLED. INFILTRATION BASINS INSTALLED PRIOR TO COMPLETION OF DWELLING CONSTRUCTION AND LOT GRADING AND PRIOR TO PERMANENT STABILIZATION OF ALL TRIBUTARY DRAINAGE AREA, SHALL BE PROTECTED FROM SEDIMENT CONTAMINATION AS NOTED ON THE EROSION CONTROL PLAN, POST–CONSTRUCTION STORMWATER MANAGEMENT PLAN, AND UNDERGROUND BASIN CONSTRUCTION DETAILS/NOTES. ROOF LEADER PIPE SYSTEMS SHALL BE CONNECTED TO INFILTRATION BASINS UPON COMPLETION OF DWELLING ROOF INSTALLATION. FILTER INLETS CONNECTION UNDERGROUND BASINS TO ROOF LEADER SYSTEMS MUST BE PROTECTED FROM SEDIMENT CONTAMINATION.

WAIVERS (APPROVED AT THE SEPTEMBER 10, 2014 BOARD OF SUPERVISORS MEETING):

1. WAIVER FROM SECTION 175–33.E WHICH REQUIRES A MINIMUM 300 FT. OFFSET FOR OPPOSING STREETS.
2. WAIVER TO PERMIT DRIVEWAY FOR LOT 1 TO ENCROACH UPON LOT 2 AS PER SLDO SECTION 175–38.B.(1).
3. PARTIAL WAIVER FROM THE PROVISIONS OF SLDO SECTION REQUIRING ALL EXISTING FEATURES WITHIN 300 FEET OF THE PROJECT. MOST FEATURES WITHIN THE LIMITS OF THE DRAWING HAVE BEEN PROVIDED.
4. WAIVER FROM SLDO SECTION 175–32.A, REQUIRING A SIGHT DISTANCE OF 635 FEET. THE SIGHT DISTANCES PROVIDED MEET PENNDOT REQUIREMENTS.

NOTE: AN INDIVIDUAL LOT GRADING PLOT PLAN MUST BE SUBMITTED TO THE TOWNSHIP FOR EACH LOT AND MUST INCLUDE GRADING, STORMWATER MANAGEMENT FACILITIES, ROOF LEADER SYSTEM, STORM SEWER, ON–LOT SEEPAGE BASIN, LOT–SPECIFIC DWELLING FOOTPRINT, FIRST FLOOR, BASEMENT FLOOR, GARAGE FLOOR ELEVATIONS, BUILDING SETBACKS, EROSION CONTROL DESIGN AND LOT SPECIFIC IMPERVIOUS SURFACE TABULATION. SUCH PLOT PLANS MUST BE APPROVED BY THE TOWNSHIP PRIOR TO COMMENCEMENT OF CONSTRUCTION OF EACH DWELLING AND LOT IMPROVEMENTS.

UTILITY POLE RELOCATION NOTE: POLE #438 SHOWN ON THE PLAN WAS DAMAGED BY A TRAFFIC ACCIDENT AND IS SCHEDULED TO BE REPLACED IN APRIL 2019 BY PECO AT THE LOCATION SHOWN ON THIS PLAN. THIS RELOCATION WAS COORDINATED BETWEEN THE DEVELOPER AND PECO. RELOCATED POLE #438 IS TO ALSO PROVIDE POWER TO THE DEVELOPMENT. THE PROPOSED LOCATION OF THE UTILITY POLE SHOWN WILL NOT CONFLICT WITH ANY EXISTING OR PROPOSED UTILITY. PECO RESERVES THE RIGHT TO CLEAR ANY VEGETATION NECESSARY IN ORDER TO MAINTAIN MINIMUM REQUIRED CLEARANCE BETWEEN ELECTRICAL WIRES AND EXISTING TREES.

SURVEYORS CERTIFICATION:

I HEREBY CERTIFY THAT TO THE BEST OF MY KNOWLEDGE AND BELIEF, ON THIS THE 8TH DAY OF FEBRUARY, 2019, THIS PLAT AND SURVEY WERE PERFORMED IN ACCORDANCE WITH THE LATEST MINIMUM STANDARDS FOR BOUNDARY SURVEYS SECTION OF THE MANUAL OF PRACTICE FOR PROFESSIONAL LAND SURVEYORS IN THE COMMONWEALTH OF PENNSYLVANIA, AS ADOPTED BY THE PENNSYLVANIA SOCIETY OF LAND SURVEYORS.

ROBERT J. SNYDER, P.L.S. PLS #SU–38747–E

COMMONWEALTH OF PENNSYLVANIA — PROFESSIONAL — ROBERT J. SNYDER — LAND SURVEYOR No.38747–E

PROJECT SERIAL No. : 20182490802
BEFORE YOU DIG ANYWHERE IN... **PENNSYLVANIA**
PENNSYLVANIA ONE CALL SYSTEM, INC. 1–800–242–1776 STOP–CALL BEFORE YOU DIG
STOP! CALL 1–800–242–1776 (TOLL FREE)
PA LAW REQUIRES 3 WORKING DAYS NOTICE FOR CONSTRUCTION PHASE AND 10 WORKING DAYS NOTICE IN DESIGN STAGE PENNSYLVANIA ONE CALL SYSTEM, Inc.
ALL TRENCHING, SHEETING AND SHORING SHALL BE IN STRICT ACCORDANCE WITH OSHA STANDARDS.

THIS IS TO CERTIFY THAT THIS PLAN HAS BEEN REVIEWED BY THE CHESTER COUNTY PLANNING COMMISSION ON:

DATE ______ COUNTY OFFICIAL ______

ON THIS, THE______DAY OF__________, 2014, BEFORE ME THE UNDERSIGNED OFFICER APPEARED, WHO BEING SWORN ACCORDING TO LAW, DEPOSES AND SAYS THAT HE/SHE IS THE OWNER OF THE PROPERTY SHOWN ON THIS PLAN, THAT THE SUBDIVISION PLAN THEREOF WAS MADE AT HIS/HER DIRECTION AND THAT HE/SHE ACKNOWLEDGES THE SAME TO BE HIS/HER ACT AND PLAN AND DESIRES THE SAME TO BE RECORDED AS SUCH ACCORDING TO LAW.

SIGNATURE OF OWNER__________

NOTARY PUBLIC__________

MY COMMISSION EXPIRES__________

THIS IS TO CERTIFY THAT THIS PLAN HAS BEEN REVIEWED BY THE TOWNSHIP PLANNING COMMISSION ON:

DATE

THIS IS TO CERTIFY THAT THIS PLAN HAS BEEN APPROVED BY THE TOWNSHIP BOARD OF SUPERVISORS ON:

DATE

I HEREBY CERTIFY THAT THIS PLAN WAS MADE UNDER MY IMMEDIATE SUPERVISION, THE PROPOSED DIMENSIONAL DETAILS ARE CORRECT, TO THE BEST OF MY KNOWLEDGE, AND THAT THIS MAP COMPLIES WITH THE PROVISIONS OF THE MAP FILING LAW, THE MUNICIPAL ORDINANCES AND REQUIREMENTS APPLICABLE THERETO.

PROFESSIONAL ENGINEER

THIS IS TO CERTIFY THAT THIS PLAN HAS BEEN REVIEWED BY EAST WHITELAND TOWNSHIP IN ACCORDANCE WITH THE TOWNSHIP CODE.

DATE ______ TOWNSHIP ENGINEER ______

REQUIRED PERMITS AND APPROVALS:

- EAST WHITELAND TOWNSHIP–AMENDED FINAL PLAN APPROVAL.
- PENNDOT HIGHWAY OCCUPANCY PERMIT.
- EROSION AND SEDIMENTATION CONTROL PLAN APPROVAL FROM CHESTER COUNTY CONSERVATION DISTRICT.
- NPDES PERMIT
- SEWAGE FACILITIES PLANNING MODULE.
- PART 2 CONSTRUCTION PERMIT FOR LOW PRESSURE SEWER SYSTEM (PADEP)
- CHESTER COUNTY PLANNING DEPARTMENT (AMENDED APPROVAL NOT REQUIRED PER CCPD)

On Lot Impervious Cover Chart

Lot No.	House and Driveway	Miscellaneous	Total Impervious Cover
Lot 1	5,900	750	6,650
Lot 3	3,780	750	4,530
Lot 4	4,205	750	4,955
Lot 5	4,160	750	4,910
Lot 6	3,505	750	4,255
Lo7 7	5,280	750	6,030
Lot 8	3,495	750	4,245
Lot 9	3,895	750	4,645
Lot 10	3,675	750	4,425
Lot 11	3,660	750	4,410
Lot 12	3,720	750	4,470
Lot 13	3,718	750	4,468
Lot 14	3,360	750	4,110

Lot #2 is an existing lot proposed to remain. No improvements are proposed for existing Lot 2. Pool water surface is considered impervious surface. Wood deck (with no impervious surface below) is considered a pervious surface.

RECORDING PLAN NOTATION: THIS PLAN IS TO BE RECORDED WITH ADDITIONAL PLANS INCLUDED IN PLAN SET IDENTIFIED AS "RECORDING PLAN SHEET # OF 5"

APPLICANT/EQUITABLE OWNER:
WOODSTONE DEVELOPMENT COMPANY, LP
70 POTTSTOWN PIKE, SUITE 100
CHESTER SPRINGS, PA 19425

SITE ADDRESS:
110 SPROUL ROAD
MALVERN, PA 19355

LEGEND

EXISTING	DESCRIPTION	PROPOSED
	PROPERTY LINE	
	ADJOINING PROPERTY LINE	
○ I.P. □ MON.	IRON PIN, MONUMENT, NAIL	● I.P. ■ MON.
	RIGHT–OF–WAY	
	CENTER LINE	
	UTILITY EASEMENT	
	SITE BENCHMARK	

GRAPHIC SCALE
40 0 20 40 80 160
(IN FEET)
1 inch = 40 ft.

RECORDING PLAN SHEET 1 OF 6

ORIGINAL PLANS BEAR A REGISTRATION SEAL IN RED INK.
COMMONWEALTH OF PENNSYLVANIA — REGISTERED PROFESSIONAL ENGINEER — ERIC J. JANETKA No. 050549–E

K&C
KELLY & CLOSE ENGINEERS
CONSULTING ENGINEERS & SURVEYORS
The Summit at Brandywine
1786 Wilmington Pike/Suite 300
Glen Mills, Pennsylvania 19342
610.358.9363 fax 610.358.9376

REV.	DATE	DESCRIPTION	BY
3	2/8/2019	REVISE PLAN PER TOWNSHIP CONSULTANT REVIEWS, NPDES PERMIT REVIEW	E.J.J.
2	10/5/2018	REVISED GRADING; REVISED SANITARY SEWER DESIGN; REVISED SWM	E.J.J.
1	9/10/2014	REVISED PER TWP 8–11–14 AND 8–18–14 REVIEW LETTERS	E.J.J.

date:	7/21/2014
scale:	1" = 40'
drawn by:	M.J.B.
checked by:	E.J.J.
dwg. name:	F–Site.dwg
project no.:	N/A

SHIRTZ FARM
110 SPROUL ROAD
EAST WHITELAND TOWNSHIP
CHESTER COUNTY, PENNSYLVANIA

RECORD PLAN

This document and all information and work product represented by and contained herein, is the sole and exclusive property of James C. Kelly & Associates, Inc., t/a Kelly & Close Engineers. The information contained herein is licensed only for limited use by the intended recipient, and no license, permission or authority is extended, directly or implied, to any party without express written permission of James C. Kelly & Associates, Inc.
Copyright, 2015, James C. Kelly & Associates, Inc. All rights reserved

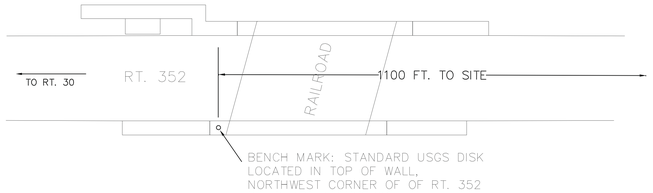

BENCH MARK DETAIL
(N.T.S.)

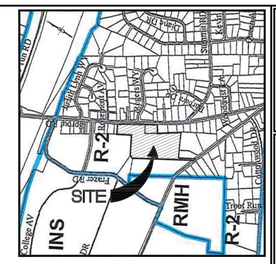

LOCATION MAP
SCALE: 1"=1000'

SURVEY NOTES:

1. BOUNDARY SHOWN AS PER A SURVEY BY RKW ENGINEERING SERVICES, INC. AND SHOWN ON A RECORD PLAN FOR PROJECT 02044 DATED 7/21/14 AND LAST REVISED 9/10/14. KELLY & CLOSE ENGINEERS PERFORMED A BOUNDARY SETTLEMENT SURVEY TO CONFIRM ACCURACY OF RKW PLAN.
2. EXISTING FEATURES SHOWN AS PER AN EXISTING CONDITIONS PLAN FOR PROJECT 02044 DATED 7/21/14 BY RKW ENGINEERING SERVICE AND BEING SHEET 2A. KELLY & CLOSE ENGINEERS PERFORMED ADDITIONAL SUPPLEMENTAL TOPOGRAPHIC SURVEYS AND VERTICAL INFORMATION SHOWN ON REFERENCE PLAN.
3. SURVEY PERFORMED WITHOUT THE BENEFIT OF A TITLE SEARCH AND SUBJECT TO RESTRICTIONS AND EASEMENT OF RECORD.
4. PHYSICAL FEATURES FROM SURVEY BY RKW ENGINEERING SERVICES, INC. FEB. 2000, NOV. 2003, AUG. 2004.
5. ELEVATIONS BASED ON USGS VERTICAL DATUM.

SOILS LEGEND AND TABLE OF LIMITATIONS & RESOLUTIONS
BASED ON U.S.D.A. – N.R.C.S. SOILS SURVEY OF CHESTER COUNTY (CURRENT VERSION)

SYMBOL	MAPPING UNITS	SLOPE	LAND CAPABILITY	HYDRIC SOIL	HYDROLOGIC GROUP	DEPTH TO BEDROCK	DEPTH TO WATER TABLE	LIMITATIONS FOR SITE DEVELOPMENT									
								DWELLINGS WITH BASEMENTS	RISK OF FROST ACTION	RISK OF EROSION OF WATER (K FACTOR[1])	RISK OF CORROSION STEEL	RISK OF CORROSION CONCRETE	DWELLINGS WITHOUT BASEMENTS	LOCAL ROADS AND STREETS	SHALLOW EXCAVATIONS	EMBANKMENTS	LAWNS & LANDSCAPING	ROAD FILL SOURCE	TOPSOIL SOURCE
GgB	GLENELG SILT LOAM	3–8%	2E	NO	B	> 80 in.	> 80 in.	NOT LIMITED	MODERATE	0.37	LOW	MODERATE	NOT LIMITED	VERY LIMITED 3,4	SOMEWHAT LIMITED	SOMEWHAT LIMITED	SOMEWHAT LIMITED	POOR 3	FAIR 9
MaB	MANOR LOAM	3–8%	2E	NO	B	72–99 in.	> 80 in.	NOT LIMITED	MODERATE	0.28	MODERATE	HIGH	NOT LIMITED	VERY LIMITED 3,4	SOMEWHAT LIMITED	VERY LIMITED	SOMEWHAT LIMITED	POOR 3	POOR 10
MaC	MANOR LOAM	8–15%	3E	NO	B	59–100 in.	> 80 in.	SOMEWHAT LIMITED	MODERATE	0.28	MODERATE	HIGH	SOMEWHAT LIMITED	SOMEWHAT LIMITED 3,4	SOMEWHAT LIMITED	VERY LIMITED	SOMEWHAT LIMITED	POOR 3	FAIR 9,10

REASONS FOR LIMITATIONS: 1 – SHRINK–SWELL 2 – SLOPE 3 – LOW STRENGTH 4 – FROST ACTION 5 – CUTBANKS CAVE 6 – PIPING 7 – GRAVEL CONTENT 8 – LARGE STONES CONTENT 9 – ROCK FRAGMENTS 10 – HARD TO RECLAIM (ROCK FRAGMENTS) 11 – DEPTH TO SATURATED ZONE

FOOTNOTES:
1. K FACTOR – ≤0.37=EROSION RESISTANT; >0.37=EASILY ERODED. CLASSIFICATIONS IDENTIFIED IN DEP E&SPC MANUAL, MARCH 2012.

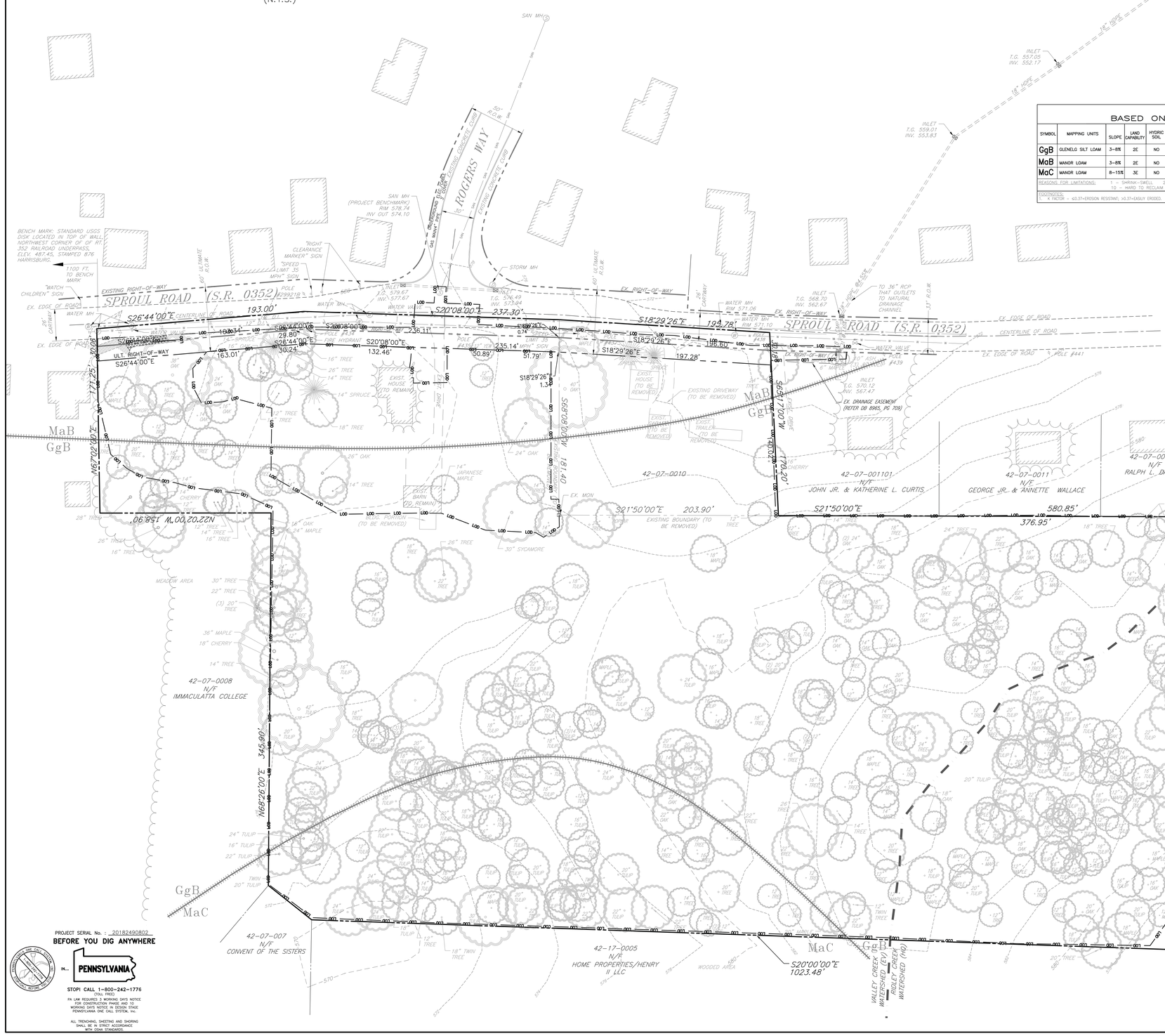

SLOPES LEGEND
SLOPES 15%–25%
SLOPES 25%+

APPLICANT/EQUITABLE OWNER:
WOODSTONE DEVELOPMENT COMPANY, LP
70 POTTSTOWN PIKE, SUITE 100
CHESTER SPRINGS, PA 19425

SITE ADDRESS:
110 SPROUL ROAD
MALVERN, PA 19355

GRAPHIC SCALE
40 0 20 40 80 160
(IN FEET)
1 inch = 40 ft.

PROJECT SERIAL No. : 20182490802
BEFORE YOU DIG ANYWHERE
IN... PENNSYLVANIA
STOP! CALL 1-800-242-1776
(TOLL FREE)
PA LAW REQUIRES 3 WORKING DAYS NOTICE FOR CONSTRUCTION PHASE AND 10 WORKING DAYS NOTICE IN DESIGN STAGE PENNSYLVANIA ONE CALL SYSTEM, INC.
ALL TRENCHING, SHEETING AND SHORING SHALL BE IN STRICT ACCORDANCE WITH OSHA STANDARDS

NPDES PERMIT

EXISTING FEATURES PLAN

This document and all information and work product represented by and contained herein, is the sole and exclusive property of James C. Kelly & Associates, Inc. t/a Kelly & Close Engineers. The information contained herein is not to be used by any person, firm or corporation for any purpose whatsoever without the authority is extended, directly or implied, to any party without express written permission of James C. Kelly & Associates, Inc.
Copyright, 2015, James C. Kelly & Associates, Inc.
All rights reserved

SHIRTZ FARM
110 SPROUL ROAD
EAST WHITELAND TOWNSHIP
CHESTER COUNTY, PENNSYLVANIA

BY	DESCRIPTION	DATE	REV
E.J.J.		7/21/2014	
E.J.J.	4 REVISED PER TWP 8-11-14 AND 8-18-14 REVIEW LETTERS	9/10/2014	1
E.J.J.	3 REVISED SANITARY SEWER DESIGN, REVISED SWM	10/25/2018	2
E.J.J.	2 REVISE PLAN PER TOWNSHIP CONSULTANT REVIEWS, NPDES PERMIT REVIEW	2/8/2019	3

date: 7/21/2014
scale: 1" = 40'
drawn by: M.J.B.
checked by: E.J.J.
dwg. name: F-Base.dwg
project no: N/A

SHEET 03 of 24

KELLY & CLOSE ENGINEERS
CONSULTING ENGINEERS & SURVEYORS
The Summit at Brandywine
One Summit Square, Suite 100
Glen Mills, Pennsylvania 19342
610.358.9263 fax 610.358.9272

INFILTRATION TESTING:

INFILTRATION TESTING WAS PERFORMED IN JUNE 2014 BY ENVIRONMENTAL MANAGEMENT CONSULTING, INC, 3706 COREY LANE, THORNDALE, AP 19372, 484-888-6923.

	TESTING RESULTS: (FS=2.0)	TESTING DEPTH
LOT 1	4.5 IN/HR	6.5'
LOT 3	3.5 IN/HR	6.5'
LOT 4	5.2 IN/HR	6.5'
LOT 5	3.5 IN/HR	5.0'
LOT 5	2.7 IN/HR	5.0'
LOT 7	10.1 IN/HR	6.5'
LOT 8	11.1 IN/HR	6.5'
LOT 9	12.5 IN/HR	5.0'
LOT 10	6.5 IN/HR	5.0'
LOT 11	11.6 IN/HR	5.5'
LOT 12	11.4 IN/HR	5.0'
LOT 13	15.3 IN/HR	4.0'
LOT 14	1.2 IN/HR	5.0'
MAIN BED	1.1 IN/HR	6.0'

NOTE: A 2.0 FACTOR OF SAFETY WAS USED FOR THE INFILTRATION RATE DESIGN OF ALL BMP'S. RATES SHOWN HAVE A FACTOR OF SAFETY OF 2.0 APPLIED. ACTUAL RATES ARE 2 TIMES THE RATES SHOWN.

UTILITY DEMOLITION KEY:

1. UNLESS OTHERWISE INDICATED, THE CONTRACTOR SHALL PERFORM THE FOLLOWING FOR EACH TYPE OF UTILITY:
   A. GAS & ELECTRIC– ABANDON UNDERGROUND UTILITIES IN PLACE
   B. WATER MAINS– ABANDON IN PLACE
   C. SANITARY & WATER SERVICES– ABANDON IN PLACE
   D. SANITARY MAINS– ABANDON IN PLACE
2. REFER TO "SPECIFIC DEMOLITION NOTES" ON THIS SHEET FOR SPECIFIC REQUIREMENTS FOR UTILITIES ABANDONED IN PLACE.
3. WHERE ABANDONED UTILITIES ARE IN CONFLICT WITH PROPOSED CONSTRUCTION, CONTRACTOR SHALL REMOVE THE CONFLICTING PORTION OF THE UTILITY.
4. WHERE THE PLAN SHOWS A "REMOVE" LABEL FOR A UTILITY OR SEWER, CONTRACTOR MAY "ABANDON", IF ACCEPTABLE TO THE UTILITY OR SEWER AUTHORITY AND IS NOT IN CONFLICT WITH PROPOSED CONSTRUCTION.

DEMOLITION GROUND STABILIZATION NOTES:

1. CONTRACTOR SHALL MINIMIZE DISTURBANCE OF EXISTING PERMANENT VEGETATIVE COVER, TO THE EXTENT PRACTICAL DURING DEMOLITION.
2. CONTRACTOR SHALL TEMPORARILY STABILIZE ALL DISTURBED AREAS PURSUANT TO THE NOTES AND DETAILS ON THE EROSION AND SEDIMENT CONTROL NOTES AND DETAILS IN THIS PLAN SET.

DEMOLISHED MATERIAL STOCKPILE NOTE:

LOCATION(S) FOR TEMPORARY STOCKPILES OF DEMOLISHED MATERIALS, SUCH AS DEMOLISHED CONCRETE, PAVING, ETC. SHALL BE APPROVED BY THE OWNER AND DESIGN ENGINEER. DEMOLISHED MATERIAL STOCKPILES CANNOT BE PLACED WITHIN MUNICIPAL RIGHT-OF-WAY AREAS OR OUTSIDE OF THE LIMITS OF DISTURBANCE LINE.

GEOLOGIC CONDITIONS NOTE:

NO KNOWN GEOLOGIC/SOIL CONDITIONS EXIST ON SITE.

IMPORTANT – CONSTRUCTION SEQUENCE NOTE: PRIOR TO ABANDONMENT AND REMOVAL OF EXISTING ON-LOT SEPTIC SYSTEM CURRENTLY SERVING DWELLING ON LOT 2, THE LOW PRESSURE SEWER SYSTEM MUST BE CONSTRUCTED, TESTED AND OPERATIONAL (UP TO THE LOCATION OF PROPOSED LOT 2 LATERAL), AND THE LATERAL AND GRINDER PUMP (FOR LOT 2) INSTALLED AND FUNCTIONING. THE EXACT LOCATION OF THE ON-LOT SEPTIC SYSTEM (TANKS, LATERAL AND SEEPAGE AREA) WAS NOT ABLE TO BE DETERMINED FROM ON-SITE INSPECTION AND REVIEW OF HISTORICAL RECORDS. IT IS POSSIBLE, THE ENTIRE SYSTEM IS LOCATED WITHIN THE PROPOSED BOUNDARY OF LOT 2, BUT THIS MUST BE VERIFIED PRIOR TO DECOMMISSIONING THE SYSTEM SERVING THE EXISTING DWELLING ON LOT 2. ALL ON-LOT SEPTIC SYSTEM COMPONENTS FOR BOTH EXISTING DWELLINGS MUST BE LOCATED AND REMOVED/ABANDONED IN ACCORDANCE WITH STATE AND LOCAL REGULATIONS.

GENERAL NOTES:

1. ALL DESIGNERS AND CONTRACTORS UTILIZING THIS PLAN AND THE INFORMATION CONTAINED THEREON ARE CAUTIONED TO COMPLY WITH THE REQUIREMENTS OF PENNSYLVANIA ACT 287. LOCATION OF EXISTING AND PROPOSED UNDERGROUND UTILITIES AND FACILITIES SHOWN ON THE DRAWINGS HAVE BEEN DEVELOPED FROM INFORMATION MADE AVAILABLE. COMPLETENESS AND ACCURACY OF LOCATION AND DEPTH OF UTILITIES AND FACILITIES CANNOT BE GUARANTEED. THE CONTRACTOR IS TO VERIFY THE DEPTH AND LOCATION OF ALL UTILITIES AND FACILITIES BEFORE THE START OF WORK. UTILIZE HAND EXCAVATION AS REQUIRED. WORK IS ALSO TO BE DONE IN ACCORDANCE WITH THE STANDARDS OF THE UTILITY COMPANIES WHOSE FACILITIES ARE IN THE PROXIMITY OF THE WORK. OTHER UTILITIES MAY BE REQUIREMENTS OF PENNSYLVANIA ACT 38 (1991), THE CONTRACTOR SHALL CONTACT THE PENNSYLVANIA ONE CALL SYSTEM AT 1-800-242-1776 , AT LEAST 3 DAYS PRIOR TO THE EXCAVATION.
2. ALL WORK SHALL BE DONE IN ACCORDANCE WITH THE APPLICABLE FEDERAL, STATE AND LOCAL CODES, AND ALL REGULATIONS APPURTENANT TO THE OCCUPATIONAL SAFETY AND HEALTH ACT OF 1970. ALL WORK SHALL BE DONE IN ACCORDANCE WITH PROJECT SPECIFICATIONS INCLUDING CURRENT APPLICABLE STANDARDS AND REQUIREMENTS. WHERE ANY STANDARDS SEEM IN CONFLICT WITH THESE DRAWINGS, NOTIFY THE CONSTRUCTION MANAGER FOR DIRECTION PRIOR TO PROCEEDING WITH WORK.
3. CONTRACTORS SHALL HAVE ALL REQUIRED "SHOP DRAWINGS"/SUBMITTAL APPROVALS PRIOR TO BEGINNING THE WORK OR ORDERING MATERIALS.
4. CONTRACTORS SHALL VERIFY ALL DIMENSIONS, INVERTS, ELEVATIONS, AND EXISTING CONDITIONS PRIOR TO PROCEEDING WITH THE WORK. VARIATIONS BETWEEN DRAWINGS AND ACTUAL FIELD CONDITIONS SHALL BE BROUGHT TO THE ATTENTION OF THE ENGINEER AND RESOLVED PRIOR TO PROCEEDING WITH THE WORK.
5. CONTRACTOR SHALL BE RESPONSIBLE FOR SAFETY, PROCEDURES, MEANS AND METHODS, SEQUENCING, AND COORDINATION.
6. ALL WORK SHALL BE PERFORMED BY QUALIFIED EXPERIENCED PERSONNEL.
7. CONTRACTOR SHALL NOTIFY THE OWNER OF PREEXISTING CONDITIONS OF DETERIORATION IN AREAS OF WORK THAT ARE UNCOVERED OR EXPOSED DURING THE WORK.
8. FIELD CHANGES REQUIRE PRIOR ENGINEERING REVIEW AND WRITTEN CONFIRMATION.
9. CONTRACTOR SHALL BE RESPONSIBLE FOR REPAIR TO ANY SIDEWALKS, LAWN, TREES, PAVING, AND OTHER IMPROVEMENTS DISTURBED OR DAMAGED BY DEMOLITION OR CONSTRUCTION ACTIVITIES PROPOSED HEREIN.
10. CONTRACTOR SHALL PROVIDE PROPER TEMPORARY BRACING AND SHORING DURING CONSTRUCTION/DEMOLITION WORK OF ALL TRENCHES AND STRUCTURES/EXISTING SITE FEATURES TO REMAIN.
11. CONTRACTOR SHALL PROVIDE LAYOUT, LINE AND GRADE UNLESS OTHERWISE NOTED.
12. CONTRACTOR SHALL NOTIFY THE OWNER OF ANY DISCREPANCIES WITHIN THE DRAWINGS, SPECIFICATIONS, CODES OR STANDARDS FOR CORRECTIVE ACTION PRIOR TO START OF WORK.
13. THE CONTRACTOR SHALL BE RESPONSIBLE FOR MAINTENANCE AND PROTECTION OF VEHICULAR AND PEDESTRIAN TRAFFIC. ALL TRAFFIC CONTROL MEASURES SHALL BE IN ACCORDANCE WITH LOCAL, PENNDOT, AND OSHA REGULATIONS.
14. CONTRACTOR SHALL PROVIDE PROTECTION FOR EXISTING UTILITIES UNLESS OTHERWISE NOTED. THE CONTRACTOR SHALL IMMEDIATELY REPAIR ANY UTILITY LINE INTERRUPTION AT NO ADDITIONAL CONTRACT COST. THE CONTRACTOR SHALL PROVIDE ADEQUATE PROTECTION AND SUPPORT FOR ALL UTILITIES AND TRENCHES EXPOSED DURING THE WORK TO INSURE AGAINST DAMAGE AT NO ADDITIONAL COST.
15. CONTRACTOR SHALL PROVIDE TEMPORARY DEWATERING OF EXCAVATIONS THROUGHOUT THE DURATION OF CONTRACT AT NO ADDITIONAL COST.
16. PROFESSIONAL INSPECTION AND ACCEPTANCE OF CONSTRUCTION FOR CONFORMANCE TO THE APPLICABLE STANDARDS AND CODES IS THE RESPONSIBILITY OF THE OWNER. SITE OBSERVATION OF THE STRUCTURAL OR GEOTECHNICAL ASPECTS OF THE PROJECT IS TO BE DONE UNDER THE DIRECT SUPERVISION OF A PROFESSIONAL ENGINEER. THE OWNER OR THE OWNER'S CONSTRUCTION REPRESENTATIVE RESERVES THE RIGHT TO INSPECT ANY PORTION OF THE WORK AND REQUEST CORRECTION TO THE OWNERS SATISFACTION FOR ALL WORK NOT COMPLETED IN ACCORDANCE WITH THE SPECIFICATION AND DRAWINGS. INSPECTIONS OR SITE OBSERVATION OF WORK BY THE ENGINEER DOES NOT RELIEVE THE CONTRACTOR FROM THE RESPONSIBILITY OF CONFORMING TO THE DRAWINGS AND SPECIFICATIONS FOR ALL CONSTRUCTION.
17. EXISTING UTILITIES SHOWN ARE BASED ON AVAILABLE DATA. DUE TO THE POTENTIAL LACK OF COMPLETE OR ACCURATE DATA REGARDING EXISTING ONSITE AND OFFSITE UTILITIES, THE CONTRACTOR SHALL ASSESS AVAILABLE DATA, SHALL REQUEST UTILITY COMPANY MARK-OUTS, SHALL COORDINATE WITH AFFECTED UTILITY COMPANIES, AND SHALL DIG TEST PITS AT ALL PROPOSED UTILITY CROSSING LOCATION SO THAT ELEVATIONS CAN BE TAKEN TO ASSESS POTENTIAL CONFLICTING PIPES/UTILITIES PRIOR TO ANY PROPOSED UTILITY CONSTRUCTION. IF UNEXPECTED UTILITY LOCATIONS OR ELEVATIONS OR PIPE CONFLICTS ARE ENCOUNTERED DURING CONSTRUCTION, OR IF THE TEST PITS REVEAL POTENTIAL CONFLICT, KELLY & CLOSE ENGINEERS, SHALL BE IMMEDIATELY NOTIFIED SO THAT ELEVATIONS AND LOCATIONS (WHERE NECESSARY) OF AFFECTED UTILITIES CAN BE OBTAINED TO FACILITATE NECESSARY DESIGN ADJUSTMENTS.
18. REMOVAL OF EXISTING UTILITIES SHALL BE COORDINATED WITH EAST WHITELAND TOWNSHIP AND APPROPRIATE UTILITY COMPANIES.

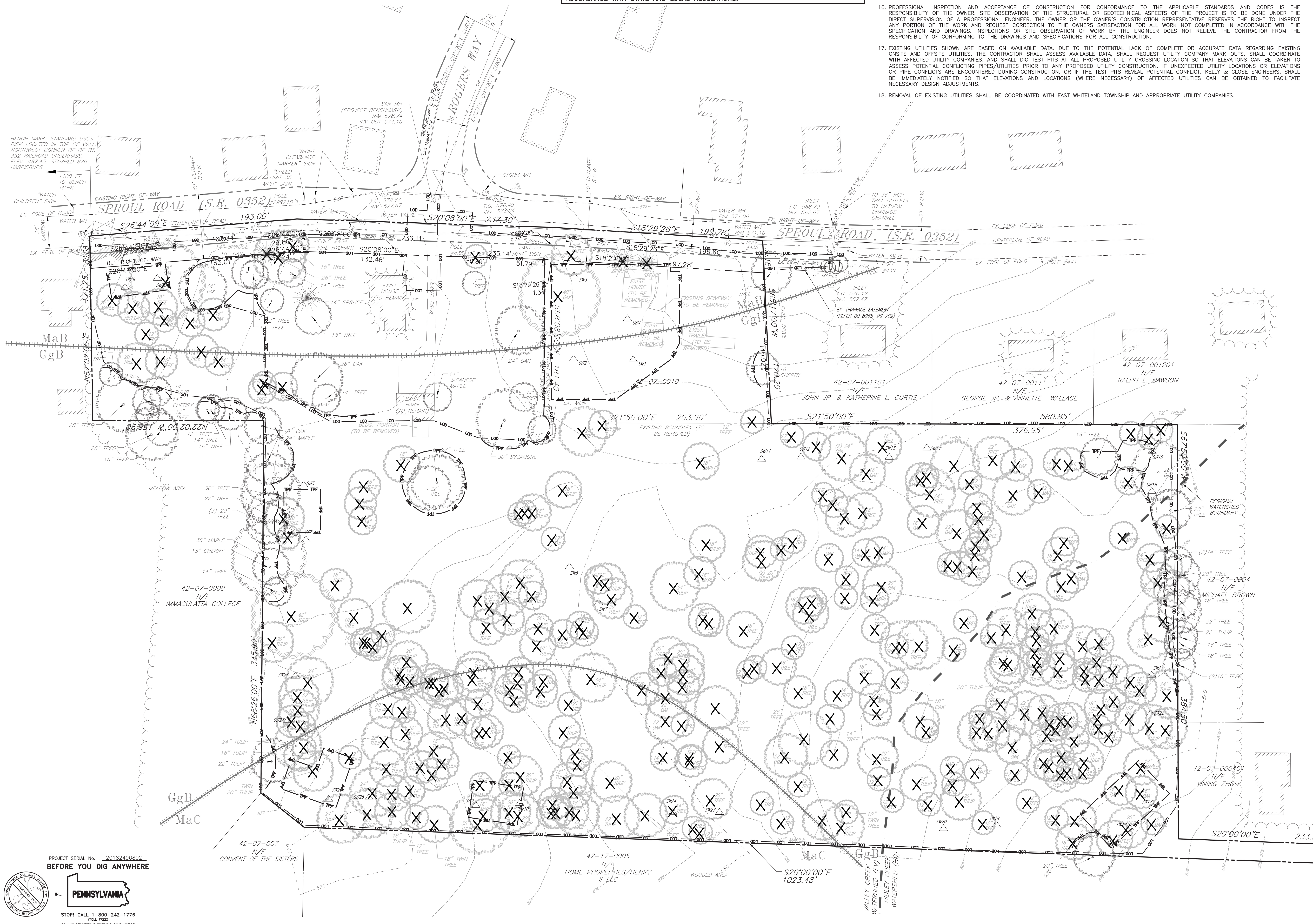

PROJECT SERIAL No. : 20182490802

BEFORE YOU DIG ANYWHERE

IN... PENNSYLVANIA

STOP! CALL 1-800-242-1776 (TOLL FREE)

PA LAW REQUIRES 3 WORKING DAYS NOTICE FOR CONSTRUCTION PHASE AND 10 WORKING DAYS NOTICE IN DESIGN STAGE PENNSYLVANIA ONE CALL SYSTEM, Inc.

ALL TRENCHING, SHEETING AND SHORING SHALL BE IN STRICT ACCORDANCE WITH OSHA STANDARDS.

SPECIFIC DEMOLITION NOTES:

1. UTILITIES TO BE REMOVED ENTIRELY OR ABANDONED IN PLACE AND FILLED ENTIRELY WITH SAND, GRAVEL, OR GROUT AS DIRECTED BY EACH UTILITY COMPANY. UTILITY POLES AND OVERHEAD WIRES SHALL BE REMOVED. COORDINATE UTILITY DEMOLITION WITH THE GOVERNING UTILITY COMPANIES.
2. CONTRACTOR SHALL COORDINATE WITH EACH UTILITY COMPANY TO DETERMINE IF EXISTING UNDERGROUND UTILITIES SHALL BE REMOVED OR ABANDONED IN PLACE.
3. UTILITY SERVICES ARE GENERALLY NOT SHOWN. CONTRACTOR SHALL LOCATE AND REMOVE OR ABANDON SERVICES AS DIRECTED BY EACH UTILITY COMPANY.
4. IT IS CONTRACTORS RESPONSIBILITY TO VISUALLY INSPECT EACH ROOM OF EACH BUILDING JUST PRIOR TO DEMOLITION, TO VERIFY THAT THERE ARE NO OCCUPANTS.
5. CONTRACTOR SHALL OBTAIN ALL REQUIRED PADEP NOTIFICATIONS AND COMPLY WITH ALL LOCAL, STATE AND FEDERAL LAWS AND REGULATIONS PERTAINING TO THIS WORK. CONTRACTOR SHALL PROVIDE ALL NOTIFICATIONS TO ALL APPLICABLE AUTHORITIES AS REQUIRED FOR WORK OR ACTIVITY WHERE NOTIFICATION IS REQUIRED. THIS INCLUDES HAVING SUPERVISING FOREMAN AVAILABLE TO PARTICIPATE IN THE INSPECTION WITH INSPECTORS, AGENCY OFFICIALS AND GENERAL CONTRACTOR'S SITE MANAGER.
6. IT SHALL BE THE CONTRACTOR'S RESPONSIBILITY TO PROVIDE ADEQUATE AND COMPETENT SUPERVISION ON THE PROJECT AT ALL TIMES AND MAINTAIN THE HIGHEST QUALITY OF WORKMANSHIP POSSIBLE. IF AT ANY TIME WORKMANSHIP IS UNSATISFACTORY, IT SHALL MEAN IMMEDIATE REMOVAL AND REPLACEMENT OF SUCH WORK AT THE SOLE EXPENSE OF THIS CONTRACTOR, WHO SHALL ALSO BE HELD RESPONSIBLE FOR SUCH TIMELY DELAY.
7. CONTRACTOR SHALL BACKFILL THE AREA OF FOUNDATION REMOVAL AND ANY OTHER EXCAVATION WITH SUITABLE ON-SITE MATERIAL, COMPACTED TO 95% PROCTOR DENSITY AS REQUIRED AND SPECIFIED TO A LEVEL EQUAL TO THE ADJACENT GRADE. BACKFILLING OF EXISTING FOUNDATIONS IS REQUISITE ON LOCAL AUTHORITIES' ACCEPTANCE AND USE OF MATERIAL AND PROCEDURE APPROVED BY ON-SITE SOILS ENGINEER. ALL FILLING OF AREAS WHERE FOUNDATIONS HAVE BEEN REMOVED MUST BE BACKFILLED IN LIFTS WITH SUITABLE MATERIAL AND IN ACCORDANCE WITH THE SPECIFICATIONS AND APPROVED BY THE ON-SITE SOILS ENGINEER.
8. CONTRACTOR IS NOTIFIED THAT THERE WILL BE NO OPEN FIRES ALLOWED ON SITE AT ANY TIME.
9. CONTRACTOR SHALL MAINTAIN, WHILE ON SITE, ALL SILTATION AND EROSION CONTROL DEVICES, WHICH HAVE BEEN INSTALLED BY OTHERS, PER THE PLANS AS REQUESTED BY THE APPROPRIATE GOVERNING AGENCY.
10. CONTRACTOR SHALL PROVIDE A DETAILED DEMOLITION, SAFETY AND DUST CONTROL PLAN WITH ALL DOCUMENTATION REQUIRED PRIOR TO STARTING WORK WHICH INCLUDES DEMOLITION, MATERIAL MOVEMENT, CRUSHING AND LOADING OPERATIONS BY SPRAYING DOWN EFFECTED AREAS WITH WATER AS REQUIRED TO MINIMIZE DUST TO ACCEPTABLE LEVELS. CONTRACTOR SHALL, AT NO ADDITIONAL COST, CLEAN DUST FROM SURROUNDING PROPERTIES IF THE ABOVE MEASURES ARE NOT TAKEN. DEMOLITION, SAFETY AND DUST CONTROL PLAN MUST BE APPROVED AT LEAST 14 DAYS PRIOR TO DEMOLITION WORK.
11. CONTRACTOR SHALL PROVIDE CONTINUOUS DUST CONTROL FOR DEMOLITION, MATERIAL MOVEMENT, CRUSHING AND LOADING OPERATIONS BY SPRAYING DOWN EFFECTED AREAS WITH WATER, AS REQUIRED TO MINIMIZE THE LEVELS OF BLOWING DUST. THIS INCLUDES SUPPLYING OF WATER TANK, WATER AND ASSOCIATED HOSES, AS REQUIRED. CONTRACTOR SHALL, AT NO EXTRA COST, CLEAN DUST FROM SURROUNDING PROPERTIES IF THE ABOVE MEASURES ARE NOT TAKEN.
12. CONTRACTOR SHALL PROVIDE AND MAINTAIN ANY AND ALL MEASURES REQUIRED TO ENSURE THE SAFE PASSAGE OF PEDESTRIAN AND VEHICLE TRAFFIC WHILE WORK IN THIS SCOPE IS COMPLETED.
13. CONTRACTOR SHALL FURNISH APPROVED DESIGN PLAN AND INSTALL ALL MAINTENANCE AND PROTECTION OF TRAFFIC CONTROL DEVICES, SIGNAGE, BARRICADES AND FLASHERS AS REQUIRED BY THE TOWNSHIP AND PENNDOT TO PROVIDE FOR SAFE TRAFFIC MOVEMENT DURING ALL TIMES WHEN WORK IN THIS SCOPE AFFECTS ANY PUBLIC ROADWAYS.
14. CONTRACTOR IS RESPONSIBLE FOR CONTACTING PA-ONE-CALL SERVICE FOR UTILITY MARKOUT PRIOR TO COMMENCEMENT OF ANY EXCAVATION ACTIVITY. CONTRACTOR TO CALL FOR MARK-OUT WHENEVER IT IS DEEMED NECESSARY OR PRUDENT.
15. CONTRACTOR WILL FURNISH ALL DUMPSTERS, HAULING AND DISPOSAL NECESSARY TO COMPLETE THIS SCOPE OF WORK. IT WILL BE THIS CONTRACTOR'S RESPONSIBILITY TO SUPERVISE AND COORDINATE DELIVERY AND PICK-UP OF ANY DUMPSTERS, INCLUDING FLAGMEN IF NECESSARY.
16. CONTRACTOR SHALL PAY TO LEGALLY DISPOSE OF ALL DEBRIS GENERATED FROM THIS SCOPE OF WORK AT A LICENSED AND APPROVED OFF-SITE DUMP. CONTRACTOR TO PROVIDE MANIFESTS AND DUMP RECORDS ON AN ON-GOING BASIS TO THE TOWNSHIP.
17. CONTRACTOR UNDERSTANDS THAT TOPSOIL MUST AND WILL BE STRIPPED PRIOR TO ANY DEMOLITION OPERATIONS. THERE SHALL BE COMPLETE COOPERATION AND COORDINATION BETWEEN THE DEMOLITION CONTRACTOR AND EARTHWORK CONTRACTOR AS IT RELATES TO THE TOPSOIL STRIPPING OPERATIONS, FOR SEQUENCING AND UNDERSTANDING. SHOULD TOPSOIL NOT BE STRIPPED PRIOR TO DEMOLITION, THE CONTRACTOR SHALL MAKE EVERY ATTEMPT IN MAINTAINING TOPSOIL IN ITS AS-IS CONDITION, WHICH INCLUDES WORKING FROM HARD SURFACES.
18. CONTRACTOR SHALL TAKE EVERY PRECAUTION TO PRESERVE EXISTING TOPSOIL FOR FUTURE USE, AS SPECIFIED AND REQUIRED.
19. CONTRACTOR SHALL CRUSH ALL BUILDING AND SITE CONCRETE AND CONCRETE BLOCK FROM BUILDING DEMOLITION AND STOCKPILE ON SITE. CONTRACTOR SHALL KEEP SEPARATE ALL BRICK FROM ALL CONCRETE. GENERAL CONTRACTOR'S RESERVES THE RIGHT TO UTILIZE ANY AND ALL MATERIAL, AS NEEDED, TO SATISFY ANY PORTION OF FILL OPERATIONS. BRICK IS ALLOWED TO BE CRUSHED AND USED AS NON-STRUCTURAL FILL ON SITE IF APPROVED BY THE TOWNSHIP. HAUL OFF AND DISPOSE OF UN-CRUSHED BRICK. THE CONTRACTOR SHALL CRUSH MATERIAL TO 2" TO 3" MAXIMUM CRUSH SIZE FOR USE AS STRUCTURAL FILL IN SPECIFIC AREAS. IF MATERIAL IS NOT TO BE CRUSHED, IT MUST BE HAULED OFF SITE AT THE DISCRETION OF GENERAL CONTRACTOR'S.
20. CONTRACTOR IS RESPONSIBLE FOR MANAGING ALL STOCKPILES OF CRUSHED MATERIAL AND STRUCTURAL FILL SOILS, IF EXCAVATED OR BROUGHT ON SITE BY THE CONTRACTOR. THIS INCLUDES COVERING THESE PILES AND MAINTAINING COVERS AS REQUIRED TO KEEP MATERIAL DRY AND TO MINIMIZE DUST. THIS CONTRACTOR SHALL BE RESPONSIBLE FOR THE REPLACEMENT OF UNSUITABLE MATERIALS AT NO ADDITIONAL COST TO GENERAL CONTRACTOR'S OR THE OWNER, IF MATERIALS HAVE DETERIORATED AS A RESULT OF THIS CONTRACTOR'S NEGLIGENT ACTIONS BY NOT MAINTAINING COVERS, POSITIVE DRAINAGE, FAILURE TO SEAL THE SURFACE OR UNAUTHORIZED MIXING OF MATERIALS.
21. CONTRACTOR SHALL DEMOLISH AND REMOVE ANY EXISTING POWER POLES, ELECTRIC, PHONE AND COMMUNICATIONS WIRE, GUY WIRES AND TRANSFORMERS, AS SPECIFIED AND REQUIRED AND WHERE THEY ARE ENCOUNTERED DURING THE PERFORMANCE OF THIS SCOPE OF WORK AND WHERE THEY WILL MATERIALLY EFFECT THE INSTALLATION OF NEW FILL, UTILITIES, STRUCTURES OR BUILDINGS. NOTE; OIL CONTAMINATES WITHIN THE TRANSFORMERS SHALL BE REMOVED BY OTHERS. THE CONTRACTOR SHALL BE RESPONSIBLE TO SCRAP TRANSFORMERS AFTER OIL CONTAMINATE REMEDIATION.
22. CONTRACTOR SHALL LEAVE ALL DEMOLISHED AND DISTURBED AREAS APPROPRIATELY GRADED FOR POSITIVE RUNOFF OF WATER AND EVENLY ROLLED AND SEALED.
23. CONTRACTOR IS RESPONSIBLE FOR STABILIZING PARTIALLY DEMOLISHED STRUCTURES AS REQUIRED.
24. CONTRACTOR IS REQUIRED, WHILE ON SITE, TO KEEP ROAD AND PAVED SURFACES CLEAN AT ALL TIMES AS A RESULT OF HIS OPERATIONS TO THE SATISFACTION OF THE TOWNSHIP AND COUNTY CONSERVATION DISTRICT. THE CONTRACTOR SHALL WASH DOWN MUD FROM ALL VEHICLES BROUGHT ON SITE IN ACCORDANCE WITH PADEP EROSION AND SEDIMENT CONTROL REQUIREMENTS AND AS NECESSARY TO KEEP ALL PUBLIC ROADS CLEAN. IN ADDITION, ANY FINES LEVIED OR COSTS FOR CLEAN-UP AS A RESULT OF THE CONTRACTOR'S FAILURE TO COMPLY WITH THESE MEASURES, WILL BE PAID BY THE CONTRACTOR.
25. CONTRACTOR SHALL GROUT SOLID OR REMOVE ANY EXISTING STORM SEWER, SANITARY SEWER, GAS AND WATER UTILITIES BEING 1.5" TO 12" IN DIAMETER AND AS NOTED AND REQUIRED, AND WHERE THEY ARE ENCOUNTERED DURING THE PERFORMANCE OF THIS SCOPE OF WORK AND WHERE THEY WILL MATERIALLY EFFECT THE INSTALLATION OF NEW SUB-GRADE, UTILITIES, STRUCTURES OR BUILDINGS. RESTORE ANY AND ALL EXCAVATIONS AS SPECIFIED AND REQUIRED. EXCAVATIONS SHALL BE BACKFILLED IN LIFTS WITH SUITABLE ON SITE MATERIALS.
26. SHOULD THE CONTRACTOR ENCOUNTER ANY GROUTED PIPE, IT SHALL BE THE CONTRACTORS RESPONSIBILITY TO REMOVE FROM TRENCH AND SITE AT NO ADDITIONAL COST TO THE OWNER. CONTRACTOR SHALL BACKFILL EXCAVATIONS IN LIFTS WITH ON SITE SUITABLE MATERIAL AND COMPACT TO 95% PROCTOR DENSITY.
27. CONTRACTOR SHALL CUT AND REMOVE ANY EXISTING STORM SEWER AND SANITARY SEWER UTILITIES BEING LARGER THAN 12", AND WHERE THEY ARE ENCOUNTERED DURING THE PERFORMANCE OF THIS SCOPE OF WORK AND WHERE SHOWN ON EXISTING UTILITY PLANS. RESTORE ANY AND ALL EXCAVATIONS AS SPECIFIED AND REQUIRED. EXCAVATIONS SHALL BE BACKFILLED IN LIFTS WITH ON SITE SUITABLE MATERIALS. CONTRACTOR SHALL UTILIZE CRUSHED AGGREGATE MATERIAL IN STREETS, DRIVEWAYS AND ROADWAYS.

TREE PROTECTION NOTES & INSTRUCTIONS:

1. EXISTING TREES OF NON-INVASIVE SPECIES SHALL BE PRESERVED WHENEVER POSSIBLE. PLEASE REFER TO INSTRUCTIONS REGARDING THE REMOVAL OF INVASIVE PLANT MATERIALS.
2. TEMPORARY FENCING 4 FEET HIGH SHALL BE INSTALLED AT THE DRIP LINE PERIMETER OR BEYOND. NO SIGNS, WIRES, CABLES, ROPING OR FENCING SHALL BE SECURED TO THE TREE AT ANY TIME. FENCES OR BARRIERS PLACED AROUND WOODY VEGETATION DURING CONSTRUCTION SHALL BE REMOVED ONLY IF IT IMPEDES THE GROWTH AND MAINTENANCE OF SUCH VEGETATION.
3. THE AREA AROUND THE BASE OF EXISTING WOODY VEGETATION SHALL REMAIN OPEN. NO IMPERVIOUS COVER, STORAGE OF EQUIPMENT, MATERIALS, DEBRIS OR FILL SHALL BE ALLOWED WITHIN THE DRIP LINE OF ANY EXISTING TREE.
4. NO UTILITY TRENCHING, CUT OR FILL, OR HEAVY EQUIPMENT COMPACTION SHALL OCCUR WITHIN THE DRIP LINE OF ANY TREE TO BE RETAINED. NO ROOTS SHALL BE CUT WITHIN THE DRIP LINE.
5. TREE ROOTS SHALL BE EXPOSED WITH THE USE OF AN AIR SPADE, AND THOSE WHICH MUST BE CUT SHALL BE CAREFULLY SEVERED BY A BACKHOE OR SIMILAR EQUIPMENT ALIGNED RADIALLY TO THE TREE. THIS METHOD WILL REDUCE THE LATERAL MOVEMENT OF THE ROOTS DURING EXCAVATION. WITHIN 4 HOURS OF ANY SEVERANCE OF ROOTS, ALL EXPOSED AND/OR DAMAGED ROOTS SHALL BE TRIMMED CLEANLY AND COVERED TEMPORARILY WITH MOIST PEAT MOSS, MOIST BURLAP OR OTHER MOIST BIODEGRADABLE MATERIAL TO KEEP THEM FROM DRYING OUT UNTIL PERMANENT COVER IS INSTALLED.
6. ALL DEAD OR SEVERELY CROSSED BRANCHES SHALL BE REMOVED BY A STATE CERTIFIED TREE PRUNING CONTRACTOR OR ARBORIST IN ACCORDANCE WITH NATIONAL ARBORIST ASSOCIATION STANDARDS.
7. PROTECTED TREES SHALL BE DEEPLY WATERED ONCE A MONTH DURING CONSTRUCTION. THEY SHALL BE FERTILIZED IN EARLY FALL (SEPTEMBER/OCTOBER) OR MID-SPRING (APRIL/MAY). FALL APPLICATIONS ARE PREFERRED. SLOW-RELEASE 3-1-1- FERTILIZER SHALL BE BROADCAST OVER THE SOIL SURFACE IN AN AREA TWICE THE SIZE OF THE DRIP LINE AT A RATE EQUIVALENT TO 1 POUND NITROGEN PER 1000 SQUARE FEET.

INFILTRATION AREAS PROTECTION NOTE:
ALL TREES INSIDE OF AND WITHIN 5 FEET OF EACH PROPOSED INFILTRATION AREA (AS DELINEATED AND PROTECTED BY ORANGE SAFETY FENCE (TPF) MUST BE REMOVED BY HAND. NO EXCAVATION EQUIPMENT IS PERMITTED WITHIN ZONES TO BE PROTECTED.

X — TREES TO BE REMOVED

— TPF — TREE PROTECTION FENCE

SLOPES LEGEND

SLOPES 15%-25%

SLOPES 25%+

APPLICANT/EQUITABLE OWNER:
WOODSTONE DEVELOPMENT COMPANY, LP
70 POTTSTOWN PIKE, SUITE 100
CHESTER SPRINGS, PA 19425

SITE ADDRESS:
110 SPROUL ROAD
MALVERN, PA 19355

GRAPHIC SCALE
40 0 20 40 80 160
(IN FEET)
1 inch = 40 ft.

COMMONWEALTH OF PENNSYLVANIA PROFESSIONAL LAND SURVEYOR ROBERT L. SNYDER No.38747-E

KELLY & CLOSE ENGINEERS
CONSULTING ENGINEERS & SURVEYORS
The Summit at Brandywine
1786 Wilmington Pike/Suite 300
Glen Mills, Pennsylvania 19342
610.358.9363 fax 610.358.9376

REV.	DATE	DESCRIPTION	BY
3	2/8/2019	REVISE PLAN PER TOWNSHIP CONSULTANT REVIEWS, NPDES PERMIT REVIEW	E.J.J.
2	10/5/2018	REVISED GRADING; REVISED SANITARY SEWER DESIGN; REVISED SWM	E.J.J.
1	9/10/2014	REVISED PER TWP 8-11-14 AND 8-18-14 REVIEW LETTERS	E.J.J.

date:	7/21/2014
scale:	1" = 40'
drawn by:	M.J.B.
checked by:	E.J.J.
dwg. name:	F-Base.dwg
project no.:	N/A

SHIRTZ FARM
110 SPROUL ROAD
EAST WHITELAND TOWNSHIP
CHESTER COUNTY, PENNSYLVANIA

DEMOLITION PLAN

This document and all information and work product represented by and contained herein, is the sole and exclusive property of James C. Kelly & Associates, Inc., t/a Kelly & Close Engineers. The information contained herein is licensed only for limited use by the intended recipient, and no license, permission or authority is extended, directly or implied, to any party without express written permission of James C. Kelly & Associates, Inc.
Copyright, 2015, James C. Kelly & Associates, Inc. All rights reserved

CONSTRUCTION NOTES:

1. IT IS BROUGHT TO THE CONTRACTOR'S ATTENTION THAT THE OWNER MAY HAVE PREPARED OTHER SPECIFIC RESOURCES, TECHNICAL REPORTS, DESIGN DOCUMENTS, ET.AL. RELATED TO THIS PROJECT, INCLUDING BUT NOT LIMITED TO: SURVEYS, GEOTECHNICAL REPORTS, ENVIRONMENTAL REPORTS, ARCHEOLOGICAL OR HISTORICAL STUDIES, AND/OR WETLANDS REPORTS. CONTRACTOR IS RESPONSIBLE FOR OBTAINING THESE DOCUMENTS FROM THE OWNER AND ADHERING TO THE REQUIREMENTS, SPECIFICATIONS, ETC. CONTAINED IN THESE DOCUMENTS. CONTRACTOR SHALL BRING TO THE ATTENTION OF THE OWNER AND ENGINEER ANY CONFLICTS BETWEEN THESE DOCUMENTS AND THE PLANS FOR REVIEW AND RESOLUTION.
2. THE CONTRACTOR SHALL BE FAMILIAR WITH AND RESPONSIBLE FOR ANY/ALL CERTIFICATIONS, INSPECTIONS, ETC. REQUIRED BY ALL GOVERNING JURISDICTIONAL AGENCIES DURING AND AFTER CONSTRUCTION FOR SIGN-OFF AND CERTIFICATE OF OCCUPANCY ISSUANCE, INCLUDING BUT NOT LIMITED TO PROCUREMENT OF SERVICES, SCHEDULING OF FIELD OBSERVATIONS AND COORDINATION WITH REPRESENTATIVES OF THE APPROPRIATE PARTIES.
3. ALL WORK SHALL BE PERFORMED IN ACCORDANCE WITH THESE PLANS AND SPECIFICATIONS AND THE REQUIREMENTS AND STANDARDS OF THE APPLICABLE GOVERNING AUTHORITY.
4. THE GEOTECHNICAL REPORT AND RECOMMENDATIONS SET FORTH THEREIN ARE A PART OF THE REQUIRED CONSTRUCTION DOCUMENTS AND IN THE CASE OF CONFLICT SHALL TAKE PRECEDENCE UNLESS SPECIFICALLY NOTED OTHERWISE ON THE PLANS. THE CONTRACTOR SHALL NOTIFY THE OWNER AND ENGINEER IN WRITING OF ANY SUCH DISCREPANCY BETWEEN THE GEOTECHNICAL REPORT AND THE PLANS, ETC.
5. THESE PLANS ARE BASED ON INFORMATION PROVIDED TO KELLY & CLOSE ENGINEERS AND SURVEYORS AT THE TIME OF PREPARATION. CONTRACTOR SHALL FIELD VERIFY EXISTING CONDITIONS AND NOTIFY THE OWNER AND KELLY & CLOSE ENGINEERS AND SURVEYORS IF ACTUAL SITE CONDITIONS DIFFER FROM THOSE SHOWN ON THE PLAN, OR IF THE PROPOSED WORK WOULD BE INHIBITED BY ANY OTHER SITE FEATURES.
6. NO PHASING OF SITE WORK IS PROPOSED. THE CONTRACTOR RESERVES THE RIGHT TO PHASE THE CONSTRUCTION WITH THE CONSENT OF THE OWNER, CHESTER COUNTY CONSERVATION DISTRICT, AND THE TOWNSHIP.
7. ALL DIMENSIONS SHOWN ON THE PLANS SHALL BE FIELD VERIFIED BY THE CONTRACTOR PRIOR TO CONSTRUCTION. CONTRACTOR SHALL NOTIFY OWNER AND ENGINEER IN WRITING IF ANY DISCREPANCIES EXIST PRIOR TO PROCEEDING WITH CONSTRUCTION. NO EXTRA COMPENSATION SHALL BE PAID TO THE CONTRACTOR FOR WORK HAVING TO BE RE-DONE DUE TO DIMENSIONS OR GRADES SHOWN INCORRECTLY ON THESE PLANS IF SUCH NOTIFICATION HAS NOT BEEN GIVEN.
8. PRIOR TO STARTING CONSTRUCTION, THE CONTRACTOR SHALL BE RESPONSIBLE TO ENSURE THAT ALL REQUIRED PERMITS AND APPROVALS HAVE BEEN OBTAINED. NO CONSTRUCTION OR FABRICATION SHALL BEGIN UNTIL THE CONTRACTOR HAS RECEIVED AND THOROUGHLY REVIEWED ALL PLANS AND OTHER DOCUMENTS BY ALL OF THE PERMITTING AUTHORITIES.
9. ALL TRASH ENCLOSURES SHALL BE CONSTRUCTED OF NON-COMBUSTIBLE MATERIAL. TRASH CONTAINERS AND COMPACTORS SHALL BE CONCEALED WITHIN FENCED AREAS CONFORMING TO THE TOWNSHIP'S FIRE CODE.
10. AT ALL INTERSECTIONS, SIDEWALK RAMPS AND DEPRESSED CURBS SHALL BE INSTALLED PER "CURB RAMPS" DETAIL ON CONSTRUCTION DETAIL SHEET.
11. ALL ELEVATIONS SHOWN ARE IN REFERENCE TO THE REFERENCED SURVEYOR'S BENCHMARK AND MUST BE VERIFIED BY THE CONTRACTOR PRIOR TO GROUND BREAK.
12. ALL PAVED CARTWAYS AND PARKING AREAS ARE TO BE CURBED AS INDICATED ON THE PLANS.
13. ALL CURB RAMPS AND ACCESSIBLE ROUTES SHALL BE CONSTRUCTED TO MEET ADA, AND PADOT REQUIREMENTS, LATEST EDITIONS.
14. CONTRACTOR IS TO EXERCISE EXTREME CARE WHEN PERFORMING ANY WORK ADJACENT TO PAVEMENT, STRUCTURES, ETC. TO REMAIN. CONTRACTOR SHALL BE RESPONSIBLE FOR TAKING THE APPROPRIATE MEASURES AS NECESSARY TO ENSURE THE STRUCTURE STABILITY OF SIDEWALKS AND PAVEMENT TO REMAIN, AND TO PROVIDE A SAFE WORK AREA.
15. CONTRACTOR IS RESPONSIBLE FOR REPAIRING THE DAMAGE DONE TO ANY EXISTING ITEM DURING CONSTRUCTION SUCH AS BUT NOT LIMITED TO DRAINAGE, UTILITIES, PAVEMENT, STRIPING, CURB, ETC. THE CONTRACTOR SHALL BE RESPONSIBLE FOR AND SHALL REPLACE ALL SIGNAL INTERCONNECT CABLE, CONDUITS AND ANY UNDERGROUND ACCESSORY EQUIPMENT DAMAGED DURING CONSTRUCTION. REPAIR SHALL BE EQUAL TO OR BETTER THAN EXISTING CONDITIONS. CONTRACTOR IS RESPONSIBLE TO DOCUMENT ALL EXISTING DAMAGE AND NOTIFY OWNER PRIOR TO CONSTRUCTION START.
16. NEITHER THE PROFESSIONAL ACTIVITIES OF OWNER OR KELLY & CLOSE ENGINEERS AND SURVEYORS, NOR THE PRESENCE OF OWNER OR KELLY & CLOSE ENGINEERS AND SURVEYORS OR ITS EMPLOYEES AND SUBCONSULTANTS AT THE CONSTRUCTION/PROJECT SITE, SHALL RELIEVE THE GENERAL CONTRACTOR OF ITS OBLIGATIONS, DUTIES, AND RESPONSIBILITIES INCLUDING, BUT NOT LIMITED TO, CONSTRUCTION MEANS, METHODS, SEQUENCES, TECHNIQUES OR PROCEDURES NECESSARY FOR PERMITTING, SUPERINTENDING AND COORDINATING THE WORK IN ACCORDANCE WITH THE CONTRACT DOCUMENTS AND ANY HEALTH AND SAFETY PRECAUTIONS REQUIRED BY ANY REGULATORY AGENCIES. OWNER AND KELLY & CLOSE ENGINEERS AND SURVEYORS AND ITS PERSONNEL HAVE NO AUTHORITY TO EXERCISE ANY CONTROL OVER ANY CONSTRUCTION CONTRACTOR OR ITS EMPLOYEES IN CONNECTION WITH THEIR WORK OR ANY HEALTH OR SAFETY PROGRAMS OR PROCEDURES. THE CONTRACTOR SHALL BE SOLELY RESPONSIBLE FOR JOBSITE SAFETY. OWNER AND KELLY & CLOSE ENGINEERS AND SURVEYORS SHALL BE INDEMNIFIED BY THE GENERAL CONTRACTOR AND SHALL BE MADE ADDITIONAL INSURED UNDER THE CONTRACTOR'S POLICIES OF GENERAL LIABILITY INSURANCE.
17. KELLY & CLOSE ENGINEERS AND SURVEYORS SHALL REVIEW AND APPROVE OR TAKE OTHER APPROPRIATE ACTION ON THE CONTRACTOR SUBMITTALS, SUCH AS SHOP DRAWINGS, PRODUCT DATA, SAMPLES, AND OTHER DATA, WHICH THE CONTRACTOR IS REQUIRED TO SUBMIT, BUT ONLY FOR THE LIMITED PURPOSE OF CHECKING FOR CONFORMANCE WITH THE DESIGN CONCEPT AND THE INFORMATION SHOWN, NOT CONSTRUCTION MEANS OR METHODS, COORDINATION OF THE WORK WITH OTHER TRADES, OR CONSTRUCTION SAFETY PRECAUTIONS, ALL OF WHICH ARE THE SOLE RESPONSIBILITY OF THE CONTRACTOR. KELLY & CLOSE ENGINEERS AND SURVEYORS' REVIEW SHALL BE CONDUCTED WITH REASONABLE PROMPTNESS WHILE ALLOWING SUFFICIENT TIME TO PERMIT ADEQUATE REVIEW. REVIEW OF A SPECIFIC ITEM SHALL NOT INDICATE THAT KELLY & CLOSE ENGINEERS AND SURVEYORS HAS REVIEWED THE ENTIRE ASSEMBLY OF WHICH THE ITEM IS A COMPONENT. KELLY & CLOSE ENGINEERS AND SURVEYORS SHALL NOT BE RESPONSIBLE FOR ANY DEVIATIONS FROM THE CONSTRUCTION DOCUMENTS NOT BROUGHT TO THE ATTENTION OF KELLY & CLOSE ENGINEERS AND SURVEYORS IN WRITING BY THE CONTRACTOR. KELLY & CLOSE ENGINEERS AND SURVEYORS SHALL NOT BE REQUIRED TO REVIEW PARTIAL SUBMISSIONS OR THOSE FOR WHICH SUBMISSIONS OF CORRELATED ITEMS HAVE NOT BEEN RECEIVED.
18. IF THE CONTRACTOR DEVIATES FROM THE PLANS AND SPECIFICATIONS, INCLUDING THE NOTES CONTAINED THEREON, WITHOUT FIRST OBTAINING PRIOR WRITTEN AUTHORIZATION FOR SUCH DEVIATIONS FROM THE OWNER AND ENGINEER, IT SHALL BE RESPONSIBLE FOR THE PAYMENT OF ALL COSTS TO CORRECT ANY WORK DONE, ALL FINES OR PENALTIES ASSESSED WITH RESPECT THERETO AND ALL COMPENSATORY OR PUNITIVE DAMAGES RESULTING THEREFROM. THE CONTRACTOR SHALL INDEMNIFY AND HOLD THE OWNER AND ENGINEER HARMLESS FROM ALL SUCH COSTS TO CORRECT ANY SUCH WORK AND FROM ALL SUCH FINES AND PENALTIES, COMPENSATION AND PUNITIVE DAMAGES AND COSTS OF ANY NATURE RESULTING THEREFROM.
19. PROFESSIONAL INSPECTION AND ACCEPTANCE OF CONSTRUCTION FOR CONFORMANCE TO THE APPLICABLE STANDARDS AND CODES IS THE RESPONSIBILITY OF THE OWNER. SITE OBSERVATION OF THE STRUCTURAL OR GEOTECHNICAL ASPECTS OF THE PROJECT IS TO BE DONE UNDER THE DIRECT SUPERVISION OF A PROFESSIONAL ENGINEER. THE OWNER OR THE OWNER'S CONSTRUCTION REPRESENTATIVE RESERVES THE RIGHT TO INSPECT ANY PORTION OF THE WORK AND REQUEST CORRECTION TO THE OWNERS SATISFACTION FOR ALL WORK NOT COMPLETED IN ACCORDANCE WITH THE SPECIFICATION AND DRAWINGS. INSPECTIONS OR SITE OBSERVATION OF WORK BY THE ENGINEER DOES NOT RELIEVE THE CONTRACTOR FROM THE RESPONSIBILITY OF CONFORMING TO THE DRAWINGS AND SPECIFICATIONS FOR ALL CONSTRUCTION.
20. IT SHALL BE THE CONTRACTOR'S RESPONSIBILITY TO PROVIDE ADEQUATE AND COMPETENT SUPERVISION ON THE PROJECT AT ALL TIMES AND MAINTAIN THE HIGHEST QUALITY OF WORKMANSHIP POSSIBLE. IF AT ANY TIME WORKMANSHIP IS UNSATISFACTORY, IT SHALL MEAN IMMEDIATE REMOVAL AND REPLACEMENT OF SUCH WORK AT THE SOLE EXPENSE OF THIS CONTRACTOR, WHO SHALL ALSO BE HELD RESPONSIBLE FOR SUCH TIMELY DELAY.
21. ALL WORK SHALL BE DONE IN ACCORDANCE WITH AND IN COORDINATION WITH THE CONSTRUCTION MANAGER'S SCHEDULE. CONTRACTOR UNDERSTANDS THAT THIS WILL REQUIRE CONTINUOUS PRODUCTION AND THE UTILIZATION OF MULTIPLE CREWS PERFORMING VARIOUS PORTIONS OF WORK SIMULTANEOUSLY.

INFILTRATION TESTING:

INFILTRATION TESTING WAS PERFORMED IN JUNE 2014 BY ENVIRONMENTAL MANAGEMENT CONSULTING, INC, 3706 COREY LANE, THORNDALE, AP 19372, 484-888-6923.

	TESTING RESULTS: (FS=2.0)	TESTING DEPTH	TOP OF BED	BOTTOM BED ELEV	TESTING ELEVATION
LOT 1	4.5 IN/HR	6.5'	573.5	569.5	569.5
LOT 3	3.5 IN/HR	6.5'	577.0	572.5	572.5
LOT 4/5	3.5 IN/HR	5.0'	571.0	566.0	566.0
LOT 6/7	10.1 IN/HR	6.5'	572.5	568.0	568.0
LOT 8/9/10	12.5 IN/HR	5.0'	580.5	576.0	576.0
LOT 11	11.6 IN/HR	5.5'	582.0	578.5	578.5
MAIN BED	1.1 IN/HR	6.0'	572.0	567.5	567.0

NOTE: A 2.0 FACTOR OF SAFETY WAS USED FOR THE INFILTRATION RATE DESIGN OF ALL BMP'S. RATES SHOWN HAVE A FACTOR OF SAFETY OF 2.0 APPLIED. ACTUAL RATES ARE 2 TIMES THE RATES SHOWN.

STORM SEWER INLET NOTE:

ALL STORM INLETS SHOWN WITH THIS SYMBOL ARE TO BE CONSTRUCTED USING PENNDOT TYPE 4 (4'X4') CONCRETE INLET BOXES FITTED WITH "SNOUT" MODEL 24F or 30F. REFER TO SNOUT DETAIL AND DESIGN TABLE (ON SHEET 4 OF 17) FOR CONSTRUCTION SPECIFICATIONS AND BOTTOM OF INLET BOX ELEVATIONS.

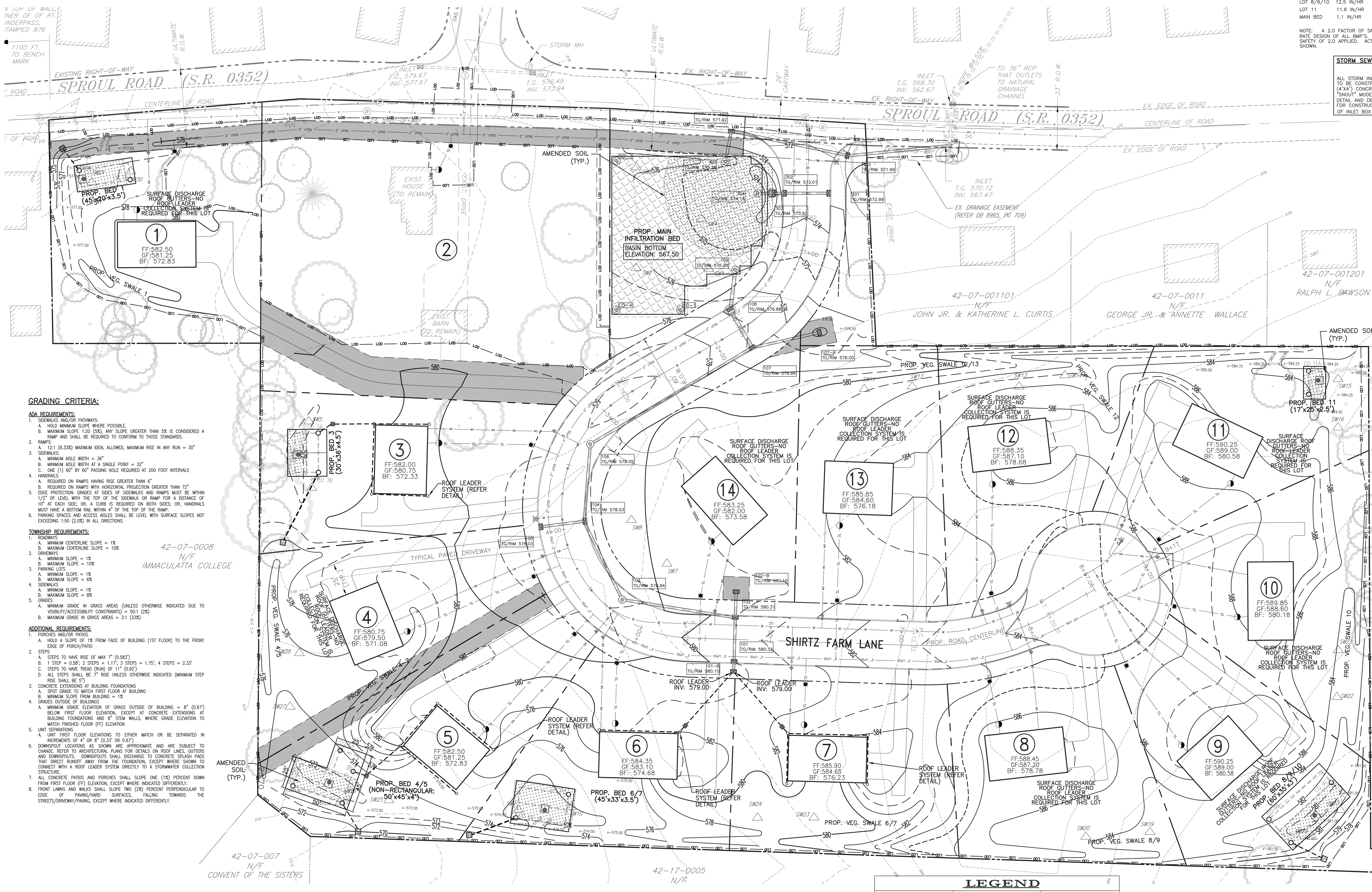

GRADING CRITERIA:

ADA REQUIREMENTS:
1. SIDEWALKS AND/OR PATHWAYS:
   A. HOLD MINIMUM SLOPE WHERE POSSIBLE.
   B. MAXIMUM SLOPE 1:20 (5%), ANY SLOPE GREATER THAN 5% IS CONSIDERED A RAMP AND SHALL BE REQUIRED TO CONFORM TO THOSE STANDARDS.
2. RAMPS:
   A. 12:1 (8.33%) MAXIMUM IDEAL ALLOWED, MAXIMUM RISE IN ANY RUN = 30"
3. SIDEWALKS:
   A. MINIMUM AISLE WIDTH = 36"
   B. MINIMUM AISLE WIDTH AT A SINGLE POINT = 32"
   C. ONE (1) 60" BY 60" PASSING AISLE REQUIRED AT 200 FOOT INTERVALS
4. HANDRAILS:
   A. REQUIRED ON RAMPS HAVING RISE GREATER THAN 6"
   B. REQUIRED ON RAMPS WITH HORIZONTAL PROJECTION GREATER THAN 72"
5. EDGE PROTECTION: GRADES AT SIDES OF SIDEWALKS AND RAMPS MUST BE WITHIN 1/2" OF LEVEL WITH THE TOP OF THE SIDEWALK OR RAMP FOR A DISTANCE OF 10" AT EACH SIDE; OR, A CURB IS REQUIRED ON BOTH SIDES; OR, HANDRAILS MUST HAVE A BOTTOM RAIL WITHIN 4" OF THE TOP OF THE RAMP.
6. PARKING SPACES AND ACCESS AISLES SHALL BE LEVEL WITH SURFACE SLOPES NOT EXCEEDING 1:50 (2.0%) IN ALL DIRECTIONS.

TOWNSHIP REQUIREMENTS:
1. ROADWAYS
   A. MINIMUM CENTERLINE SLOPE = 1%
   B. MAXIMUM CENTERLINE SLOPE = 10%
2. DRIVEWAYS
   A. MINIMUM SLOPE = 1%
   B. MAXIMUM SLOPE = 10%
3. PARKING LOTS
   A. MINIMUM SLOPE = 1%
   B. MAXIMUM SLOPE = 6%
4. SIDEWALKS
   A. MINIMUM SLOPE = 1%
   B. MAXIMUM SLOPE = 8%
5. GRADES
   A. MINIMUM GRADE IN GRASS AREAS (UNLESS OTHERWISE INDICATED DUE TO VISIBILITY/ACCESSIBILITY CONSTRAINTS) = 50:1 (2%)
   B. MAXIMUM GRADE IN GRASS AREAS = 3:1 (33%)

ADDITIONAL REQUIREMENTS:
1. PORCHES AND/OR PATIOS
   A. HOLD A SLOPE OF 1% FROM FACE OF BUILDING (1ST FLOOR) TO THE FRONT EDGE OF PORCH/PATIO
2. STEPS
   A. STEPS TO HAVE RISE OF MAX 7" (0.583')
   B. 1 STEP = 0.58'; 2 STEPS = 1.17'; 3 STEPS = 1.75'; 4 STEPS = 2.33'
   C. STEPS TO HAVE TREAD (RUN) OF 11" (0.92')
   D. ALL STEPS SHALL BE 7" RISE UNLESS OTHERWISE INDICATED (MINIMUM STEP RISE SHALL BE 5")
3. CONCRETE EXTENSIONS AT BUILDING FOUNDATIONS
   A. SPOT GRADE TO MATCH FIRST FLOOR AT BUILDING
   B. MINIMUM SLOPE FROM BUILDING = 1%
4. GRADES OUTSIDE OF BUILDINGS
   A. MINIMUM GRADE ELEVATION OF GRASS OUTSIDE OF BUILDING = 8" (0.67') BELOW FIRST FLOOR ELEVATION, EXCEPT AT CONCRETE EXTENSIONS AT BUILDING FOUNDATIONS AND 8" STEM WALLS, WHERE GRADE ELEVATION TO MATCH FINISHED FLOOR (FF) ELEVATION
5. UNIT SEPARATIONS
   A. UNIT FIRST FLOOR ELEVATIONS TO EITHER MATCH OR BE SEPARATED IN INCREMENTS OF 4" OR 8" (0.33' OR 0.67')
6. DOWNSPOUT LOCATIONS AS SHOWN ARE APPROXIMATE AND ARE SUBJECT TO CHANGE. REFER TO ARCHITECTURAL PLANS FOR DETAILS ON ROOF LINES, GUTTERS AND DOWNSPOUTS. DOWNSPOUTS SHALL DISCHARGE TO CONCRETE SPLASH PADS THAT DIRECT RUNOFF AWAY FROM THE FOUNDATION, EXCEPT WHERE SHOWN TO CONNECT WITH A ROOF LEADER SYSTEM DIRECTLY TO A STORMWATER COLLECTION STRUCTURE.
7. ALL CONCRETE PATIOS AND PORCHES SHALL SLOPE ONE (1%) PERCENT DOWN FROM FIRST FLOOR (FF) ELEVATION, EXCEPT WHERE INDICATED DIFFERENTLY.
8. FRONT LAWNS AND WALKS SHALL SLOPE TWO (2%) PERCENT PERPENDICULAR TO EDGE OF PAVING/HARD SURFACES, FALLING TOWARDS THE STREETS/DRIVEWAY/PAVING, EXCEPT WHERE INDICATED DIFFERENTLY.

PROJECT SERIAL No. : 20182490802

BEFORE YOU DIG ANYWHERE

IN... PENNSYLVANIA

STOP! CALL 1-800-242-1776 (TOLL FREE)

PA LAW REQUIRES 3 WORKING DAYS NOTICE FOR CONSTRUCTION PHASE AND 10 WORKING DAYS NOTICE IN DESIGN STAGE PENNSYLVANIA ONE CALL SYSTEM, Inc.

ALL TRENCHING, SHEETING AND SHORING SHALL BE IN STRICT ACCORDANCE WITH OSHA STANDARDS.

IMPORTANT – CONSTRUCTION SEQUENCE NOTE: PRIOR TO ABANDONMENT AND REMOVAL OF EXISTING ON-LOT SEPTIC SYSTEM CURRENTLY SERVING DWELLING ON LOT 2, THE LOW PRESSURE SEWER SYSTEM MUST BE CONSTRUCTED, TESTED AND OPERATIONAL (UP TO THE LOCATION OF PROPOSED LOT 2 LATERAL), AND THE LATERAL AND GRINDER PUMP (FOR LOT 2) INSTALLED AND FUNCTIONING. THE EXACT LOCATION OF THE ON-LOT SEPTIC SYSTEM (TANKS, LATERAL AND SEEPAGE AREA) WAS NOT ABLE TO BE DETERMINED FROM ON-SITE INSPECTION AND REVIEW OF HISTORICAL RECORDS. IT IS POSSIBLE, THE ENTIRE SYSTEM IS LOCATED WITHIN THE PROPOSED BOUNDARY OF LOT 2, BUT THIS MUST BE VERIFIED PRIOR TO DECOMMISSIONING THE SYSTEM SERVING THE EXISTING DWELLING ON LOT 2. ALL ON-LOT SEPTIC SYSTEM COMPONENTS FOR BOTH EXISTING DWELLINGS MUST BE LOCATED AND REMOVED/ABANDONED IN ACCORDANCE WITH STATE AND LOCAL REGULATIONS.

ON LOT BEDS	Width	Length	Depth	Perf. Pipe Size (Inches)	Total Length of Perf. Pipe (Feet)	Perf. Pipe Elev	Bot of Bed Elev
Lot 1	20.0	45.0	3.5	12.0	90.0	570.5	569.5
Lot 3	30.0	36.0	4.5	12.0	126.0	573.5	572.5
Lot 4/5	1,750 SF **		4.0	12.0	196.0	567.0	566.0
Lot 6/7	33.0	45.0	3.5	12.0	162.0	569.0	568.0
Lot 8/9/10	35.0	60.0	3.0	12.0	196.0	577.0	576.0
Lot 11	17.0	25.0	2.5	12.0	56.0	579.5	578.5

** BASIN FOOTPRINT AND DEPTH, ONLY SHOWN; NON-RECTANGULAR BASIN-REFER DIMENSIONS ON PLAN.

INFILTRATION BED DESIGN TABLE

LEGEND

EXISTING	DESCRIPTION	PROPOSED
	PROPERTY LINE	
	ADJOINING PROPERTY LINE	
○ I.P. □ MON.	IRON PIN, MONUMENT, NAIL	○ I.P. ■ MON.
	RIGHT-OF-WAY	
	CENTER LINE	
	UTILITY EASEMENT	
578	2' CONTOUR	578
580	10' CONTOUR	580

APPLICANT/EQUITABLE OWNER:
WOODSTONE DEVELOPMENT COMPANY, LP
70 POTTSTOWN PIKE, SUITE 100
CHESTER SPRINGS, PA 19425

SITE ADDRESS:
110 SPROUL ROAD
MALVERN, PA 19355

GRAPHIC SCALE
30 0 15 30 60 120
(IN FEET)
1 inch = 30 ft.

ORIGINAL PLANS BEAR A REGISTRATION SEAL IN RED INK.

COMMONWEALTH OF PENNSYLVANIA — REGISTERED PROFESSIONAL ENGINEER — ERIC J. JANETKA — No. 050549-E

K&C — KELLY & CLOSE ENGINEERS
CONSULTING ENGINEERS & SURVEYORS
The Summit at Brandywine
1786 Wilmington Pike/Suite 300
Glen Mills, Pennsylvania 19342
610.358.9363 fax 610.358.9376

REV.	DATE	DESCRIPTION	BY
3	2/8/2019	REVISE PLAN PER TOWNSHIP CONSULTANT REVIEWS, NPDES PERMIT REVIEW	E.J.J.
2	10/5/2018	REVISED GRADING; REVISED SANITARY SEWER DESIGN; REVISED SWM	E.J.J.
1	9/10/2014	REVISED PER TWP 8-11-14 AND 8-18-14 REVIEW LETTERS	E.J.J.

date: 7/21/2014
scale: 1" = 30'
drawn by: M.J.B.
checked by: E.J.J.
dwg. name: F-Grade.dwg
project no.: N/A

SHIRTZ FARM
110 SPROUL ROAD
EAST WHITELAND TOWNSHIP
CHESTER COUNTY, PENNSYLVANIA

GRADING PLAN

This document and all information and work product represented by and contained herein, is the sole and exclusive property of James C. Kelly & Associates, Inc., t/a Kelly & Close Engineers. The information contained herein is licensed only for limited use by the intended recipient, and no license, permission or authority is extended, directly or implied, to any party without express written permission of James C. Kelly & Associates, Inc.

Copyright, 2015, James C. Kelly & Associates, Inc. All rights reserved

UTILITY NOTES:

GENERAL:

1. LOCATIONS OF ALL EXISTING UTILITIES SHOWN HEREON HAVE BEEN DEVELOPED FROM UTILITY COMPANY RECORDS AND/OR ABOVE GROUND INSPECTION OF THE SITE. COMPLETENESS OR ACCURACY OF TYPE, SIZE AND DEPTH OR HORIZONTAL LOCATION OF UNDERGROUND FACILITIES OR STRUCTURES CANNOT BE GUARANTEED. PURSUANT TO REQUIREMENTS OF THE PENNSYLVANIA LEGISLATIVE ACT NUMBER 38, CONTRACTORS MUST VERIFY LOCATION AND DEPTH OF ALL UNDERGROUND UTILITIES AND FACILITIES PRIOR TO START OF WORK.
2. ALL UTILITY LINES INCLUDING, BUT NOT LIMITED TO, ELECTRIC, GAS, STREET LIGHT SUPPLY, CABLE TELEVISION, TELEPHONE AND F.I.O.S., SHALL BE PLACED UNDERGROUND.
3. ALL UTILITIES MUST MAINTAIN AN 18" MINIMUM VERTICAL CLEARANCE, WHERE SAID CLEARANCES CAN NOT BE MET, CONCRETE ENCASEMENT MAY BE USED. IN NO CASE SHALL MINIMUM CLEARANCE BE LESS THAN 6". REFER CONCRETE ENCASEMENT DETAIL ON THE CONSTRUCTION DETAILS SHEET.
4. WHERE WATERMAINS, LATERALS, GAS, ELECTRIC, AND/OR OTHER UTILITY LINES CONFLICT WITH STORM AND GRAVITY SANITARY SEWER LINES. WATERMAINS, LATERALS, GAS, ELECTRIC, AND/OR OTHER UTILITY LINES ARE TO DIP UNDER SAID CONFLICTS USING 45 DEGREE BENDS (MAX).
5. THE TOWNSHIP'S INSPECTION DEPARTMENT SHALL BE NOTIFIED AT LEAST 48 HOURS IN ADVANCE THAT INSPECTION IS REQUIRED. NOTIFICATION SHALL BE MADE IN WRITING OR VERBALLY, BUT IN EITHER INSTANCE, NOTIFICATION MUST BE RECEIVED BY THE INSPECTION DEPARTMENT(S) PRIOR TO THE SAID 48 HOURS.
6. SHOULD ANY CHANGE BE REQUIRED DUE TO FIELD CONDITIONS ENCOUNTERED, OR IF ANY CHANGE FROM THE CONSTRUCTION DRAWING IS REQUIRED, APPROVAL OF A FIELD CHANGE SHALL BE REQUESTED FROM THE TOWNSHIP. THE CHANGE SHALL NOT COMMENCE UNTIL APPROVAL IS GRANTED BY THE TOWNSHIP.
7. ALL CONSTRUCTION IMPROVEMENTS WITHIN THE PUBLIC RIGHT-OF-WAYS SHALL CONFORM TO THE TOWNSHIP'S ENGINEERING STANDARDS.
8. ALL ON-SITE BUILDING IMPROVEMENTS SHALL CONFORM TO THE TOWNSHIP'S CODE.
9. THE MINIMUM DISTANCE BETWEEN THE PLACEMENT OF TREES, LIGHT POLES, ETC. AND UTILITY SERVICE LINES SHALL BE A MINIMUM OF 10 FEET, UNLESS A LESSER DISTANCE IS APPROVED DUE TO SITE CONSTRAINTS.
10. ALL SANITARY AND STORM SEWER WITH A SLOPE LESS THAN 1% SHALL BE CONSTRUCTED USING A LASER DEVICE TO ASSURE PROPER LINE AND GRADE.
11. ALL MANHOLE AND INLET STRUCTURES SHALL BE MADE OF PRECAST CONCRETE MEETING ALL TOWNSHIP AND PENNDOT STANDARDS UNLESS OTHERWISE APPROVED BY THE TOWNSHIP.
12. ALL EXISTING UTILITY LINES TO BE ABANDONED IN PLACE, SHALL BE CAPPED AND/OR PLUGGED IN ACCORDANCE WITH TOWNSHIP REQUIREMENTS, AND THE DEMOLITION PLANS.
13. CONTRACTOR SHALL PROVIDE LAYOUT, LINE AND GRADE UNLESS OTHERWISE NOTED.
14. CONTRACTOR SHALL SUBMIT ALL REQUIRED SHOP DRAWINGS AND DOCUMENTATION FOR THE PROPOSED STORM, SANITARY, AND STREET MATERIALS TO BOTH THE DESIGN ENGINEER AND THE MUNICIPAL ENGINEER AND RECEIVE APPROVAL FROM BOTH PRIOR TO COMMENCEMENT OF ANY CONSTRUCTION RELATED TO SAID ITEMS.
15. CONTRACTOR SHALL ADHERE TO ALL HIGH PRESSURE PETROLEUM PRODUCTS AND NATURAL GAS PIPELINE COMPANY'S GUIDELINES, REGULATIONS AND RESTRICTIONS.

STORMWATER:

1. ALL STORM SEWER PIPE SHALL BE HIGH DENSITY POLYETHYLENE (HDPE) PIPE, TYPE 'S' SMOOTH LINED IN ACCORDANCE WITH PADOT FORM 408 SPECIFICATIONS, SECTION 601. REFER TO THE PROFILE SHEETS FOR PIPE SIZES.
2. STORMWATER ROOF DRAINS AND SUMP PUMPS SHALL NOT DISCHARGE WATER DIRECTLY ON TO A SIDEWALK OR A STREET. STORMWATER ROOF DRAINS SHALL EITHER DISCHARGE TO A STORM SEWER OR A CONCRETE SPLASH PAD (TO BE INDICATED ON "SUPPLEMENTAL GRADING PLANS"). ROOF DRAINS SHALL BE 4" MIN. PVC SDR-35 OR HDPE PIPE, WITH MINIMUM 12" COVER AND MINIMUM 0.50% SLOPE. ALL PIPE CONNECTING MORE THAN ONE 4" ROOF DISCHARGE PIPE SHALL BE A MINIMUM OF 8" IN DIAMETER.
3. ALL INLET GRATES SHALL BE BICYCLE SAFE AND BE MADE OF FABRICATED STEEL.
4. ALL STORM SEWER INLETS SHALL HAVE TOP UNITS AS NOTED ON THE UTILITY AND PROFILE PLANS.
5. ALL STORM SEWER MANHOLES SHALL BE 48" DIAMETER MANHOLES UNLESS OTHERWISE NOTED ON THE PLANS.
6. ALL STORM SEWER STRUCTURES WHICH EXCEED 60" IN DEPTH SHALL BE CONSTRUCTED WITH STEPS PURSUANT TO PENNDOT PUBLICATION 72, RC 34 AND 39.
7. ALL STORM SEWER INLETS SHALL HAVE AFFIXED TO THE INLETS THE DRAINAGE MARKER "TROUT LOGO PLATE", PRODUCT NUMBER 00700160, AS MANUFACTURED BY EJ GROUP, INC.
8. A BLANKET ACCESS EASEMENT IS GRANTED TO EAST WHITELAND TOWNSHIP AND THE CHESTER COUNTY CONSERVATION DISTRICT FOR THE INSPECTION AND POSSIBLE EMERGENCY MAINTENANCE OF STORMWATER MANAGEMENT FACILITIES PER THE PA BMP MANUAL AND THE POST CONSTRUCTION STORMWATER MANAGEMENT PLAN.

UTILITY LINE TRENCH EXCAVATION NOTES:

1. LIMIT ADVANCE CLEARING AND GRUBBING OPERATIONS TO A DISTANCE EQUAL TO TWO TIMES THE LENGTH OF PIPE INSTALLATION THAT CAN BE COMPLETED IN ONE DAY.
2. WORK CREWS AND EQUIPMENT FOR TRENCHING, PLACEMENT OF PIPE, PLUG CONSTRUCTION AND BACKFILLING WILL BE SELF-CONTAINED AND SEPARATE FROM CLEARING AND GRUBBING AND SITE RESTORATION AND STABILIZATION OPERATIONS.
3. ALL SOIL EXCAVATED FROM THE TRENCH WILL BE PLACED ON THE UPHILL SIDE OF THE TRENCH.
4. LIMIT DAILY TRENCH EXCAVATION TO THE LENGTH OF PIPE PLACEMENT, PLUG INSTALLATION AND BACKFILLING THAT CAN BE COMPLETED THE SAME DAY.
5. WATER THAT ACCUMULATES IN THE OPEN TRENCH WILL BE COMPLETELY REMOVED BY PUMPING BEFORE PIPE PLACEMENT AND/OR BACKFILLING BEGINS. WATER REMOVED FROM THE TRENCH SHALL BE PUMPED THROUGH A FILTRATION DEVICE SUCH AS A FILTER BAG.
6. EACH DAY FOLLOWING PIPE PLACEMENT AND TRENCH BACKFILLING, THE DISTURBED AREA WILL BE GRADED TO FINAL CONTOURS AND IMMEDIATELY STABILIZED ACCORDING TO THE SURFACE STABILIZATION CRITERIA FOR PERMANENT COVER.

WATER:

1. A WATER CAPACITY LETTER, FROM AQUA PA WAS OBTAINED IN NOVEMBER 2005.
2. DOMESTIC AND FIRE SERVICES – ALL SIZES, MATERIALS AND DETAILS OF CONSTRUCTION SHALL BE PER AQUA SPECIFICATIONS AND STANDARDS. WATER MAIN SHALL BE DUCTILE IRON PIPE CLASS 50, CEMENT LINED AND COATED ON THE OUTSIDE WITH BITUMINOUS SEAL COAT CONFORMING TO ANSI A21.4 (AWWA C104), OR EPOXY COATED. PIPE SHALL CONFORM TO 'FEDERAL SPECIFICATIONS FOR PIPE, WATER DUCTILE IRON WW-P-421C".
3. FIRE HYDRANT NOTE:
   WHEREVER A PUBLIC OR COMMUNITY WATER DISTRIBUTION SYSTEM IS PROVIDED, A FIRE PROTECTION WATER SYSTEM SHALL BE INSTALLED. FIRE HYDRANTS SHALL BE LOCATED OR ADDITIONAL FIRE HYDRANTS ADDED TO MAINTAIN AN AVERAGE SPACING OF 500 FEET BETWEEN HYDRANTS AND A MAXIMUM DISTANCE OF 250 FEET FROM ANY POINT ON THE STREET OR ROAD FRONTAGE TO A HYDRANT IN ACCORDANCE WITH 2009 INTERNATIONAL FIRE CODE TABLE C105.1.

GAS:

1. GAS MAINS, SERVICES AND APPURTENANCES TO BE PROVIDED BY PECO.
2. ALL APPLICABLE LOCAL, STATE AND FEDERAL APPLICATIONS, FEES, APPROVALS, AND PERMITS SHALL BE OBTAINED BY THE APPLICANT PRIOR TO INSTALLATION OF GAS MAINS, SERVICES & APPURTENANCES.
3. GAS MAINS, SERVICES AND APPURTENANCES SHALL BE COVERED BY BLANKET EASEMENTS GRANTED TO PECO.

ELECTRIC/PHONE/INTERNET/CABLE:

1. ELECTRIC, PHONE, INTERNET AND CABLE FACILITIES TO BE PROVIDED BY EACH INDIVIDUAL UTILITY COMPANY.
2. ALL APPLICABLE LOCAL, STATE AND FEDERAL APPLICATIONS, FEES, APPROVALS AND PERMITS SHALL BE OBTAINED BY THE APPLICANT PRIOR TO INSTALLATION OF ELECTRIC, PHONE, INTERNET AND CABLE SERVICES.
3. ELECTRIC, PHONE, INTERNET AND CABLE FACILITIES SHALL BE COVERED BY BLANKET EASEMENTS GRANTED TO EACH RESPECTIVE UTILITY COMPANY.

GEOTECHNICAL NOTES:

1. CONTRACTOR SHALL RETAIN A COPY OF THE GEOTECHNICAL REPORT ON SITE DURING CONSTRUCTION, AND SHALL STRICTLY ADHERE TO THE RECOMMENDATIONS AND SPECIFICATIONS CONTAINED THEREIN.
2. REFER TO ARCHITECTURAL PLANS BY OTHERS FOR BUILDING FOUNDATIONS.
3. WHERE THESE PLANS ARE IN CONFLICT WITH THE GEOTECHNICAL REPORT, CONTRACTOR SHALL IMMEDIATELY INFORM THE ENGINEER TO RESOLVE THE CONFLICT.

IMPORTANT – CONSTRUCTION SEQUENCE NOTE: PRIOR TO ABANDONMENT AND REMOVAL OF EXISTING ON-LOT SEPTIC SYSTEM CURRENTLY SERVING DWELLING ON LOT 2, THE LOW PRESSURE SEWER SYSTEM MUST BE CONSTRUCTED, TESTED AND OPERATIONAL (UP TO THE LOCATION OF PROPOSED LOT 2 LATERAL), AND THE LATERAL AND GRINDER PUMP (FOR LOT 2) INSTALLED AND FUNCTIONING. THE EXACT LOCATION OF THE ON-LOT SEPTIC SYSTEM (TANKS, LATERAL AND SEEPAGE AREA) WAS NOT ABLE TO BE DETERMINED FROM ON-SITE INSPECTION AND REVIEW OF HISTORICAL RECORDS. IT IS POSSIBLE, THE ENTIRE SYSTEM IS LOCATED WITHIN THE PROPOSED BOUNDARY OF LOT 2, BUT THIS MUST BE VERIFIED PRIOR TO DECOMMISSIONING THE SYSTEM SERVING THE EXISTING DWELLING ON LOT 2. ALL ON-LOT SEPTIC SYSTEM COMPONENTS FOR BOTH EXISTING DWELLINGS MUST BE LOCATED AND REMOVED/ABANDONED IN ACCORDANCE WITH STATE AND LOCAL REGULATIONS.

ON LOT BEDS	Width	Length	Depth	Perf. Pipe Size (Inches)	Total Length of Perf. Pipe (Feet)	Perf. Pipe Elev	Bot of Bed Elev
Lot 1	20.0	45.0	3.5	12.0	90.0	570.5	569.5
Lot 3	30.0	36.0	4.5	12.0	126.0	573.5	572.5
Lot 4/5	1,750 SF **		4.0	12.0	196.0	567.0	566.0
Lot 6/7	33.0	45.0	3.5	12.0	162.0	569.0	568.0
Lot 8/9/10	35.0	60.0	3.0	12.0	196.0	577.0	576.0
Lot 11	17.0	25.0	2.5	12.0	56.0	579.5	578.5

** BASIN FOOTPRINT AND DEPTH, ONLY SHOWN; NON-RECTANGULAR BASIN-REFER DIMENSIONS ON PLAN.

INFILTRATION BED DESIGN TABLE

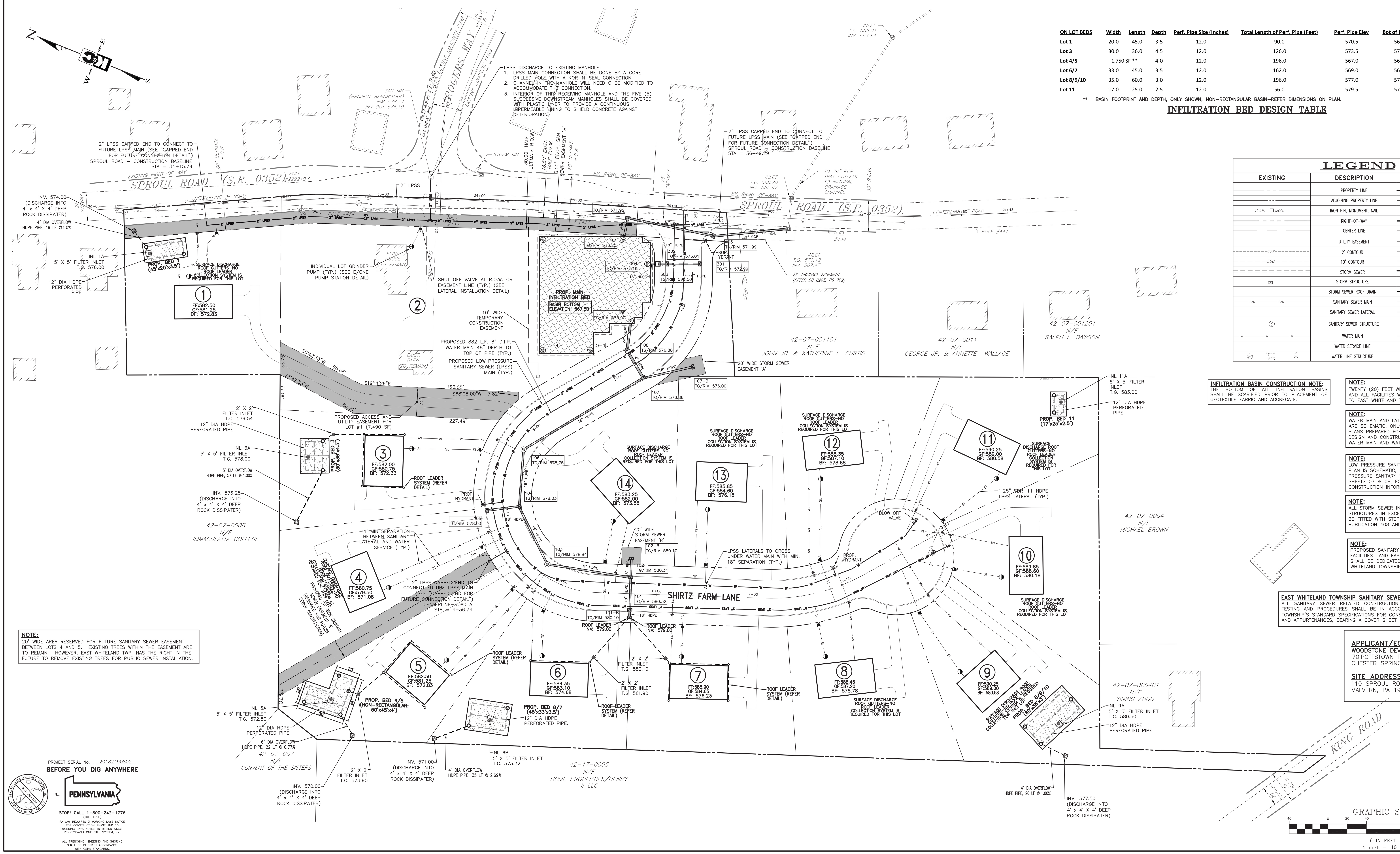

NOTE:
20' WIDE AREA RESERVED FOR FUTURE SANITARY SEWER EASEMENT BETWEEN LOTS 4 AND 5. EXISTING TREES WITHIN THE EASEMENT ARE TO REMAIN. HOWEVER, EAST WHITELAND TWP. HAS THE RIGHT IN THE FUTURE TO REMOVE EXISTING TREES FOR PUBLIC SEWER INSTALLATION.

PROJECT SERIAL No. : 20182490802

BEFORE YOU DIG ANYWHERE IN... PENNSYLVANIA

STOP! CALL 1-800-242-1776 (TOLL FREE)

PA LAW REQUIRES 3 WORKING DAYS NOTICE FOR CONSTRUCTION PHASE AND 10 WORKING DAYS NOTICE IN DESIGN STAGE PENNSYLVANIA ONE CALL SYSTEM, Inc.

ALL TRENCHING, SHEETING AND SHORING SHALL BE IN STRICT ACCORDANCE WITH OSHA STANDARDS.

LEGEND

EXISTING	DESCRIPTION	PROPOSED
	PROPERTY LINE	
	ADJOINING PROPERTY LINE	
I.P. MON.	IRON PIN, MONUMENT, NAIL	I.P. MON.
	RIGHT-OF-WAY	
	CENTER LINE	
	UTILITY EASEMENT	
578	2' CONTOUR	578
580	10' CONTOUR	580
	STORM SEWER	
	STORM STRUCTURE	
	STORM SEWER ROOF DRAIN	
SAN SAN	SANITARY SEWER MAIN	2" LPSS 2" LPSS
	SANITARY SEWER LATERAL	SL SL SL
	SANITARY SEWER STRUCTURE	ARV
W W W	WATER MAIN	W W W
	WATER SERVICE LINE	WS WS WS
	WATER LINE STRUCTURE	

INFILTRATION BASIN CONSTRUCTION NOTE:
THE BOTTOM OF ALL INFILTRATION BASINS SHALL BE SCARIFIED PRIOR TO PLACEMENT OF GEOTEXTILE FABRIC AND AGGREGATE.

NOTE:
TWENTY (20) FEET WIDE STORM SEWER EASEMENTS AND ALL FACILITIES WITHIN SHALL BE DEDICATED TO EAST WHITELAND TOWNSHIP.

NOTE:
WATER MAIN AND LATERALS SHOWN ON THIS PLAN ARE SCHEMATIC, ONLY. REFER TO WATER DESIGN PLANS PREPARED FOR AQUA PENNSYLVANIA, FOR DESIGN AND CONSTRUCTION DETAILS RELATED TO WATER MAIN AND WATER SERVICES CONSTRUCTION.

NOTE:
LOW PRESSURE SANITARY SEWER SHOWN ON THIS PLAN IS SCHEMATIC, ONLY. REFER TO LOW PRESSURE SANITARY SEWER PLAN AND PROFILES SHEETS 07 & 08, FOR DETAILED DESIGN AND CONSTRUCTION INFORMATION.

NOTE:
ALL STORM SEWER INLET RISER AND MANHOLE STRUCTURES IN EXCESS OF 5 FEET DEEP MUST BE FITTED WITH STEPS PURSUANT TO PENNDOT PUBLICATION 408 AND 72M.

NOTE:
PROPOSED SANITARY SEWER FACILITIES AND EASEMENTS SHALL BE DEDICATED TO EAST WHITELAND TOWNSHIP

EAST WHITELAND TOWNSHIP SANITARY SEWER CONSTRUCTION NOTE:
ALL SANITARY SEWER RELATED CONSTRUCTION MATERIALS, MEANS, METHODS, TESTING AND PROCEDURES SHALL BE IN ACCORDANCE WITH EAST WHITELAND TOWNSHIP'S STANDARD SPECIFICATIONS FOR CONSTRUCTION OF SANITARY SEWERS AND APPURTENANCES, BEARING A COVER SHEET DATE OF MAY 9, 2013.

APPLICANT/EQUITABLE OWNER:
WOODSTONE DEVELOPMENT COMPANY, LP
70 POTTSTOWN PIKE, SUITE 100
CHESTER SPRINGS, PA 19425

SITE ADDRESS:
110 SPROUL ROAD
MALVERN, PA 19355

GRAPHIC SCALE
(IN FEET)
1 inch = 40 ft.

ORIGINAL PLANS BEAR A REGISTRATION SEAL IN RED INK.
COMMONWEALTH OF PENNSYLVANIA REGISTERED PROFESSIONAL ENGINEER ERIC J. JANETKA No. 050549-E

KELLY & CLOSE ENGINEERS
CONSULTING ENGINEERS & SURVEYORS
The Summit at Brandywine
1786 Wilmington Pike/Suite 300
Glen Mills, Pennsylvania 19342
610.358.9363 fax 610.358.9376

REV.	DATE	DESCRIPTION	BY
3	2/8/2019	REVISE PLAN PER TOWNSHIP CONSULTANT REVIEWS, NPDES PERMIT REVIEW	E.J.J.
2	10/5/2018	REVISED GRADING; REVISED SANITARY SEWER DESIGN; REVISED SWM	E.J.J.
1	9/10/2014	REVISED PER TWP 8-11-14 AND 8-18-14 REVIEW LETTERS	E.J.J.

date: 7/21/2014
scale: 1" = 40'
drawn by: M.J.B.
checked by: E.J.J.
dwg. name: F-Util.dwg
project no.: N/A

SHIRTZ FARM
110 SPROUL ROAD
EAST WHITELAND TOWNSHIP
CHESTER COUNTY, PENNSYLVANIA

UTILITY PLAN

This document and all information and work product represented by and contained herein, is the sole and exclusive property of James C. Kelly & Associates, Inc., t/a Kelly & Close Engineers. The information contained herein is licensed only for limited use by the intended recipient, and no license, permission or authority is extended, directly or implied, to any party without express written permission of James C. Kelly & Associates, Inc.
Copyright, 2015, James C. Kelly & Associates, Inc. All rights reserved

LPSS DISCHARGE TO EXISTING MANHOLE:
1. LPSS MAIN CONNECTION SHALL BE DONE BY A CORE DRILLED HOLE WITH A KOR-N-SEAL CONNECTION.
2. CHANNEL IN THE MANHOLE WILL NEED O BE MODIFIED TO ACCOMMODATE THE CONNECTION.
3. INTERIOR OF THIS RECEIVING MANHOLE AND THE FIVE (5) SUCCESSIVE DOWNSTREAM MANHOLES SHALL BE COVERED WITH PLASTIC LINER TO PROVIDE A CONTINUOUS IMPERMEABLE LINING TO SHIELD CONCRETE AGAINST DETERIORATION.

STRC – 6
2" AIR RELEASE VALVE

2" LPSS CAPPED END TO CONNECT TO FUTURE LPSS MAIN (SEE "CAPPED END FOR FUTURE CONNECTION DETAIL") SPROUL ROAD – CONSTRUCTION BASELINE STA = 31+15.79

2" LPSS CAPPED END TO CONNECT TO FUTURE LPSS MAIN (SEE "CAPPED END FOR FUTURE CONNECTION DETAIL") SPROUL ROAD – CONSTRUCTION BASELINE STA = 36+49.29

SPROUL ROAD (S.R. 0352)

2" LPSS

2"x2" TEE WITH 2"x1.25" REDUCER ON LATERAL

INDIVIDUAL LOT GRINDER PUMP (TYP.) (SEE E/ONE PUMP STATION DETAIL)

SHUT OFF VALVE AT R.O.W. OR EASEMENT LINE (TYP.) (SEE LATERAL INSTALLATION DETAIL)

STRC – 5
2" IN LINE FLUSHING STATION
(SEE DETAIL "A" FOR TEE INTERSECTION)

PROP. MAIN INFILTRATION BED
BASIN BOTTOM ELEVATION: 567.50

STRC – 4
2" IN LINE FLUSHING STATION
(SEE DETAIL "B" FOR TEE INTERSECTION)

PROP. HYDRANT

EX. DRAINAGE EASEMENT
(DEED BOOK 5965, PG 709)

PROPOSED 882 L.F. 8" D.I.P. WATER MAIN 48" DEPTH TO TOP OF PIPE (TYP.)

PROPOSED LOW PRESSURE SANITARY SEWER (LPSS) MAIN (TYP.)

42-07-001101
N/F
JOHN JR. & KATHERINE L. CURTIS

42-07-0011
N/F
GEORGE JR., & ANNETTE WALLACE

42-07-001201
N/F
RALPH L. DAWSON

42-07-0008
N/F
IMMACULATTA COLLEGE

STRC – 3
2" IN LINE FLUSHING STATION
(SEE DETAIL "B" FOR TEE INTERSECTION)

11' MIN SEPARATION BETWEEN SANITARY LATERAL AND WATER SERVICE (TYP.)

2" LPSS-CAPPED END TO CONNECT FUTURE LPSS MAIN (SEE "CAPPED END FOR FUTURE CONNECTION DETAIL") CENTERLINE-ROAD A STA. = 4+36.74

PROPOSED 20' WIDE SANITARY SEWER EASEMENT 'A' (DEDICATED TO FUTURE SEWER CONSTRUCTION)

SHIRTZ FARM LANE

LPSS LATERALS TO CROSS UNDER WATER MAIN WITH MIN. 18" SEPARATION (TYP.)

STRC – 1
1.25" END LINE FLUSHING STAION

1.25" SDR-11 HDPE LPSS LATERAL (TYP.)

BLOW OFF VALVE

1.25"x1.25" TEE

STRC – 2
1.25" AIR RELEASE VALVE

2"x1.25" REDUCER

2"x2" TEE WITH 2"x1.25" REDUCER ON LATERAL

PLAN VIEW
SCALE: 1"=40'

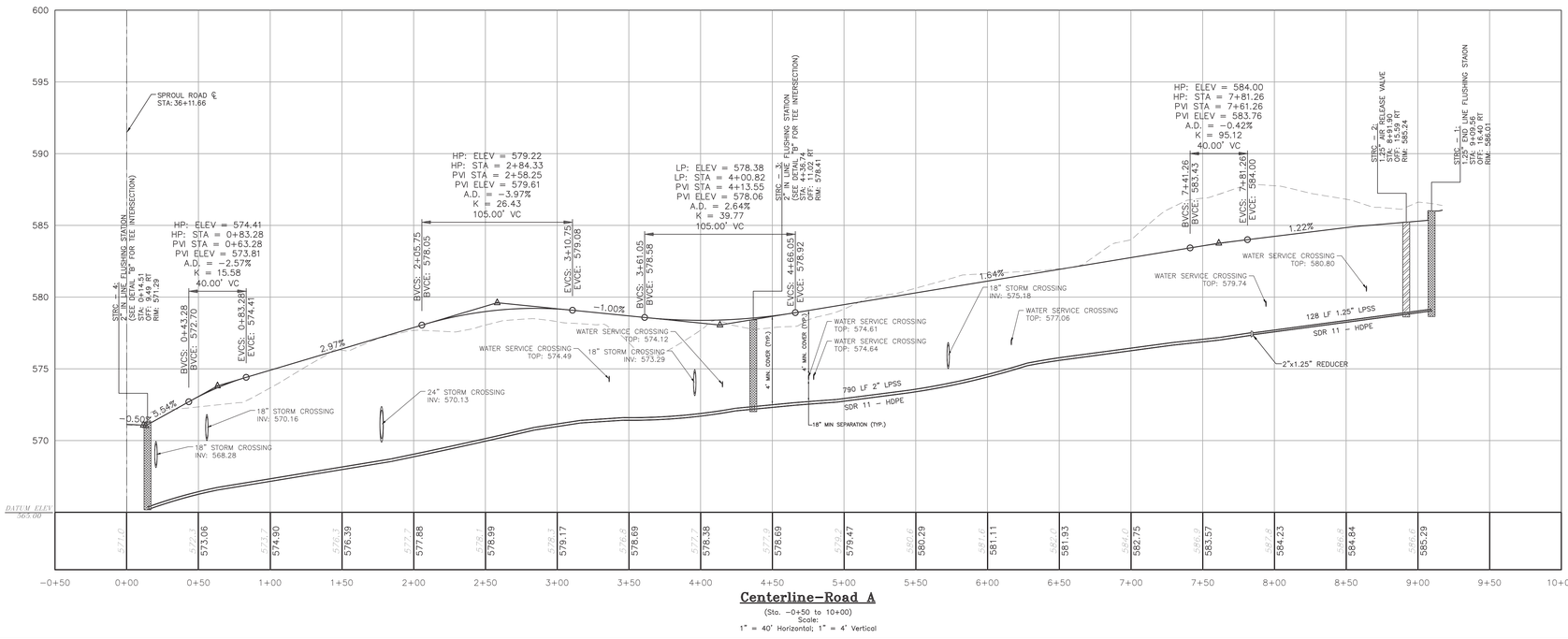

Centerline–Road A
(Sta. −0+50 to 10+00)
Scale:
1" = 40' Horizontal; 1" = 4' Vertical

EAST WHITELAND TOWNSHIP SANITARY SEWER CONSTRUCTION NOTE:
ALL SANITARY SEWER RELATED CONSTRUCTION MATERIALS, MEANS, METHODS, TESTING AND PROCEDURES SHALL BE IN ACCORDANCE WITH EAST WHITELAND TOWNSHIP'S STANDARD SPECIFICATIONS FOR CONSTRUCTION OF SANITARY SEWERS AND APPURTENANCES, BEARING A COVER SHEET DATE OF MAY 9, 2013.

LOW PRESSURE SANITARY SEWER SYSTEM NOTES:

1. ALL CONSTRUCTION OF LOW PRESSURE SANITARY SEWER (LPSS) MAIN AND LATERALS SHALL BE COMPLETED IN ACCORDANCE WITH "STANDARDS SPECIFICATIONS FOR SANITARY SEWERS AND APPURTENANCES, PREPARED FOR EAST WHITELAND TOWNSHIP, DATED MAY 9, 2013, BY ARRO CONSULTING, INC. (ARRO# 10310.03) AS APPLICABLE.
2. PROVIDE MINIMUM 4' COVER FROM TOP OF LPSS MAINS/LATERALS TO FINAL GRADE.
3. LPSS MAINS/LATERALS SHALL HAVE FOLLOWING MINIMUM CLEARANCES FROM OTHER UTILITIES:
   - 3.1. HORIZONTAL:
     - 3.1.1. WATER MAINS AND SERVICES: 10'
     - 3.1.2. OTHER UTILITIES (STORM SEWERS, ELECTRIC, GAS, ETC.): 6'
   - 3.2. VERTICAL:
     - 3.2.1. WATER MAINS AND SERVICE LATERALS: 18" MEASURED FROM BOTTOM OF WATER LINE TO TOP OF SANITARY SEWER LINE. MINIMUM OF 18" SEPARATION SHALL BE MAINTAINED FOR AT LEAST 10' ON EITHER SIDE OF THE CROSSING AS MEASURED PERPENDICULAR FROM THE WATER LINE. ENCASE 20 LF (10' ON EACH SIDE OF CROSSING) OF WATER LINE IN CONCRETE TO PROVIDE STRUCTURAL SUPPORT SO THAT THE WATER LINE DOES NOT SETTLE OR DEFLECT DURING OR AFTER COMPLETION OF CONSTRUCTION.
     - 3.2.2. OTHER UTILITIES (STORM SEWERS, ELECTRIC, GAS, ETC.): 12" MEASURED FROM EDGE OF SANITARY SEWER LINE TO EDGE OF UTILITY LINE.
4. WHEN LPSS MAINS/LATERALS CONFLICT WITH STORM SEWERS, WATER MAINS/SERVICE LINES OR ANY OTHER UTILITIES, LPSS MAINS/LATERALS ARE TO DIP UNDER SAID CONFLICT USING 45° BENDS MAXIMUM UNLESS SHOWN ON THE PLANS OTHERWISE WITH LPSS MAIN IN A STEEL CASING PIPE.
5. INDIVIDUAL LPSS LATERAL AND WATER SERVICE LATERAL LOCATIONS SHOWN ON THIS PLAN ARE FOR ILLUSTRATIVE PURPOSES AND ARE SUBJECT TO CHANGES BASED ON ARCHITECTURAL PLAN OF THE HOUSES AND LOCATION OF THE HOUSES ON LOTS.
6. REFER TO EQUIPMENT MANUFACTURER'S INSTALLATION GUIDES AS APPLICABLE.
7. ALL ELECTRIC WORK MUST BE INSPECTED AND CERTIFIED IN ACCORDANCE WITH THE EAST WHITELAND TOWNSHIP BUILDING CODE.
8. IN CASE OF ANY LPSS LATERAL NOT READY TO BE EXTENDED TO THE GRINDER PUMP STATION ON THE APPLICABLE TOWNSHIP LOT; CAP END OF LATERAL AT 2' BEYOND SHUT OFF VALVE AND INSTALL 2"X4" TIMBER MARKER, PAINTED GREEN WITH LATERAL DEPTH MARKED ON TOP.
9. SHUT–OFF VALVES SHALL BE PROVIDED AT ROAD RIGHT–OF–WAY LINE OR SANITARY SEWER EASEMENT LINE AS APPLICABLE.
10. SHOP DRAWINGS FOR ALL MATERIALS TO BE INSTALLED FOR THE LPSS SYSTEM MUST BE SUBMITTED TO THE TOWNSHIP FOR REVIEW AND APPROVAL PRIOR TO INSTALLATION.
11. AS–BUILT PLANS SHALL BE PROVIDED IN ACCORDANCE WITH THE TOWNSHIP REQUIREMENTS.

LEGEND

2" LPSS — 2" LPSS	LOW PRESSURE SANITARY SEWER MAIN
SL — SL	LOW PRESSURE SANITARY LATERAL
	END–LINE FLUSHING STATION
	IN–LINE FLUSHING STATION
ARV	AIR RELEASE VALVE
	SHUT–OFF VALVE
	INDIVIDUAL GRINDER PUMP

GRAPHIC SCALE
40 0 20 40 80 160
(IN FEET)
1 inch = 40 ft.

PROFESSIONAL ENGINEER CERTIFICATION
COMMONWEALTH OF PENNSYLVANIA
ERIC J. JANETKA
ENGINEER
No. 044891
PROFESSIONAL ENGINEER
I HEREBY CERTIFY THAT THE PLANS AND SPECIFICATIONS HEREIN ARE IN COMPLIANCE WITH THE REGULATIONS OF THE DEPARTMENT OF ENVIRONMENTAL PROTECTION, BUREAU OF WATER QUALITY MANAGEMENT, AND THE APPROVED PLANNING MODULE FOR LAND DEVELOPMENT.

KELLY & CLOSE ENGINEERS
CONSULTING ENGINEERS & SURVEYORS
The Summit at Brandywine
1 Summit Road, Suite 200
Glen Mills, Pennsylvania 19342
610.358.9363 fax 610.358.9372

REV	DATE	DESCRIPTION	BY
3	2/8/2018	REVISE PLAN PER TOWNSHIP CONSULTANT REVIEWS, NPDES PERMIT REVIEW	E.J.J.
2	10/25/2016	REVISED GRADING, REVISED SANITARY SEWER DESIGN, REVISED SWM	E.J.J.
1	9/10/2014	REVISED PER TWP 8-11-14 AND 8-18-14 REVIEW LETTERS	E.J.J.

date: 7/21/2014
scale: AS NOTED
drawn by: M.J.B.
checked by: E.J.J.
dwg. name: F-Profile.dwg
project no: N/A

SHIRTZ FARM
110 SPROUL ROAD
EAST WHITELAND TOWNSHIP
CHESTER COUNTY, PENNSYLVANIA

LOW PRESSURE SANITARY SEWER PLAN & PROFILES (1 OF 2)

This document and all information and work product represented by and contained herein, is the sole and exclusive property of James C. Kelly & Associates, Inc. f/k/a Kelly & Close Engineers. The information contained herein shall not be used, reproduced, revised, or disclosed in any form by any party without express written permission of James C. Kelly & Associates, Inc. or its authority is extended, directly or implied, to any party without express written permission of James C. Kelly & Associates, Inc.
Copyright, 2015, James C. Kelly & Associates, Inc.
All rights reserved

SHEET 07 of 24

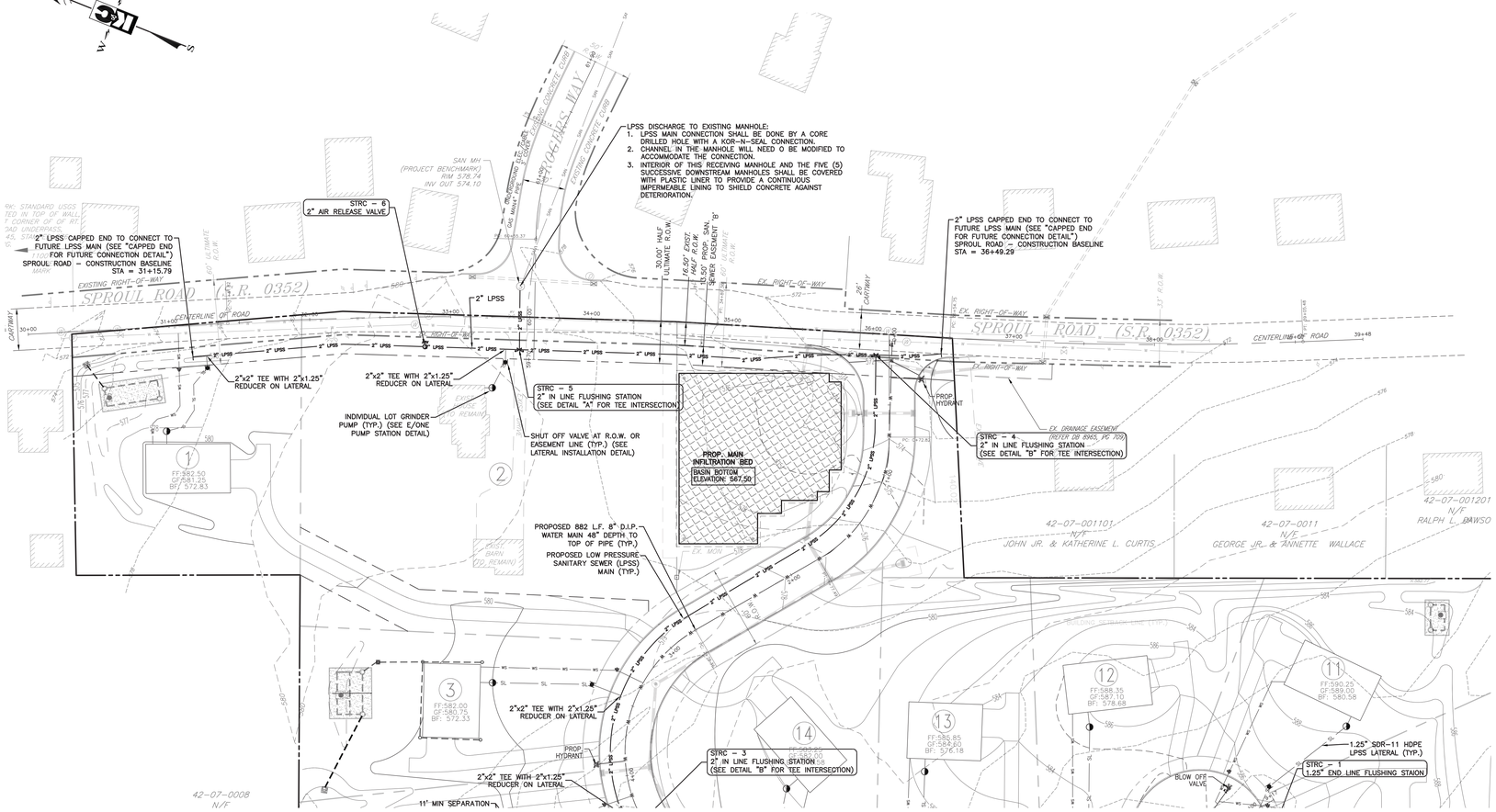

PLAN VIEW
SCALE: 1"=40'

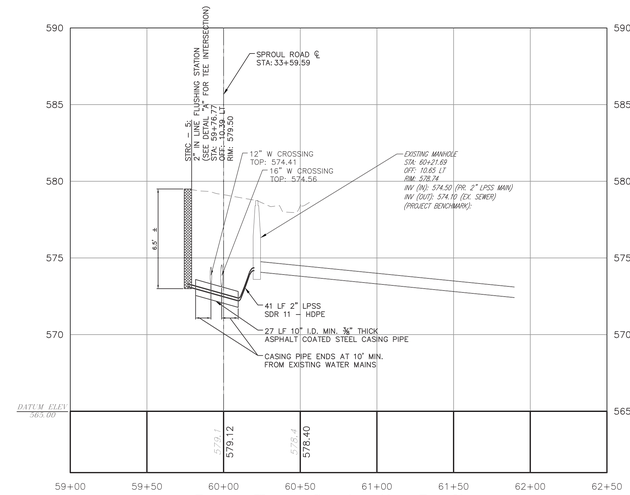

Rogers Way - Construction Baseline
(Sta. 59+00 to 62+50)
Scale:
1" = 40' Horizontal; 1" = 4' Vertical

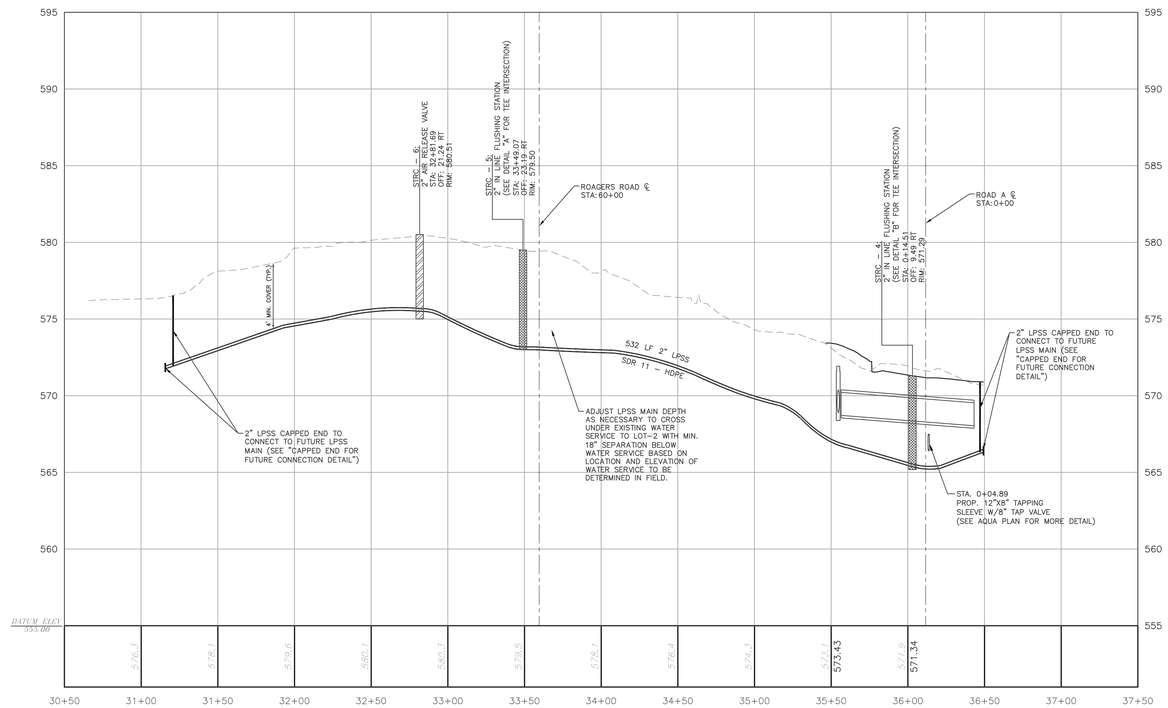

Sproul Road - Construction Baseline
(Sta. 30+50 to 37+50)
Scale:
1" = 40' Horizontal; 1" = 4' Vertical

EAST WHITELAND TOWNSHIP SANITARY SEWER CONSTRUCTION NOTE:
ALL SANITARY SEWER RELATED CONSTRUCTION MATERIALS, MEANS, METHODS, TESTING AND PROCEDURES SHALL BE IN ACCORDANCE WITH EAST WHITELAND TOWNSHIP'S STANDARD SPECIFICATIONS FOR CONSTRUCTION OF SANITARY SEWERS AND APPURTENANCES, BEARING A COVER SHEET DATE OF MAY 9, 2013.

LOW PRESSURE SANITARY SEWER SYSTEM NOTES:

1. ALL CONSTRUCTION OF LOW PRESSURE SANITARY SEWER (LPSS) MAIN AND LATERALS SHALL BE COMPLETED IN ACCORDANCE WITH "STANDARDS SPECIFICATIONS FOR SANITARY SEWERS AND APPURTENANCES, PREPARED FOR EAST WHITELAND TOWNSHIP, DATED MAY 9, 2013, BY ARRO CONSULTING, INC. (ARRO# 10310.03) AS APPLICABLE.
2. PROVIDE MINIMUM 4' COVER FROM TOP OF LPSS MAINS/LATERALS TO FINAL GRADE.
3. LPSS MAINS/LATERALS SHALL HAVE FOLLOWING MINIMUM CLEARANCES FROM OTHER UTILITIES:
   - 3.1. HORIZONTAL:
     - 3.1.1. WATER MAINS AND SERVICES: 10'
     - 3.1.2. OTHER UTILITIES (STORM SEWERS, ELECTRIC, GAS, ETC.): 6'
   - 3.2. VERTICAL:
     - 3.2.1. WATER MAINS AND SERVICE LATERALS: 18" MEASURED FROM BOTTOM OF WATER LINE TO TOP OF SANITARY SEWER LINE. MINIMUM OF 18" SEPARATION SHALL BE MAINTAINED FOR AT LEAST 10' ON EITHER SIDE OF THE CROSSING AS MEASURED PERPENDICULAR FROM THE WATER LINE. ENCASE 20 LF (10' ON EACH SIDE OF CROSSING) OF WATER LINE IN CONCRETE TO PROVIDE STRUCTURAL SUPPORT SO THAT THE WATER LINE DOES NOT SETTLE OR DEFLECT DURING OR AFTER COMPLETION OF CONSTRUCTION.
     - 3.2.2. OTHER UTILITIES (STORM SEWERS, ELECTRIC, GAS, ETC.): 12" MEASURED FROM EDGE OF SANITARY SEWER LINE TO EDGE OF UTILITY LINE.
4. WHEN LPSS MAINS/LATERALS CONFLICT WITH STORM SEWERS, WATER MAINS/SERVICE LINES OR ANY OTHER UTILITIES, LPSS MAINS/LATERALS ARE TO DIP UNDER SAID CONFLICT USING 45° BENDS MAXIMUM UNLESS SHOWN ON THE PLANS OTHERWISE WITH LPSS MAIN IN A STEEL CASING PIPE.
5. INDIVIDUAL LPSS LATERAL AND WATER SERVICE LATERAL LOCATIONS SHOWN ON THIS PLAN ARE FOR ILLUSTRATIVE PURPOSES AND ARE SUBJECT TO CHANGES BASED ON ARCHITECTURAL PLAN OF THE HOUSES AND LOCATION OF THE HOUSES ON LOTS.
6. REFER TO EQUIPMENT MANUFACTURER'S INSTALLATION GUIDES AS APPLICABLE.
7. ALL ELECTRIC WORK MUST BE INSPECTED AND CERTIFIED IN ACCORDANCE WITH THE EAST WHITELAND TOWNSHIP BUILDING CODE.
8. IN CASE OF ANY LPSS LATERAL NOT READY TO BE EXTENDED TO THE GRINDER PUMP STATION ON THE APPLICABLE TOWNSHIP LOT; CAP END OF LATERAL AT 2' BEYOND SHUT OFF VALVE AND INSTALL 2"X4" TIMBER MARKER, PAINTED GREEN WITH LATERAL DEPTH MARKED ON TOP.
9. SHUT-OFF VALVES SHALL BE PROVIDED AT ROAD RIGHT-OF-WAY LINE OR SANITARY SEWER EASEMENT LINE AS APPLICABLE.
10. SHOP DRAWINGS FOR ALL MATERIALS TO BE INSTALLED FOR THE LPSS SYSTEM MUST BE SUBMITTED TO THE TOWNSHIP FOR REVIEW AND APPROVAL PRIOR TO INSTALLATION.
11. AS-BUILT PLANS SHALL BE PROVIDED IN ACCORDANCE WITH THE TOWNSHIP REQUIREMENTS.

LEGEND

2" LPSS — 2" LPSS	LOW PRESSURE SANITARY SEWER MAIN
SL — SL	LOW PRESSURE SANITARY LATERAL
	END-LINE FLUSHING STATION
	IN-LINE FLUSHING STATION
ARV	AIR RELEASE VALVE
	SHUT-OFF VALVE
	INDIVIDUAL GRINDER PUMP

GRAPHIC SCALE
40 0 20 40 60 160
(IN FEET)
1 inch = 40 ft.

DOCUMENT PREPARED UNDER THE SUPERVISION AND DIRECTION OF: ERIC J. JANETKA, ENGINEER, No. 080355, COMMONWEALTH OF PENNSYLVANIA

KELLY & CLOSE ENGINEERS
CONSULTING ENGINEERS & SURVEYORS
The Summit at Brandywine
1260 Wilmington Pike, Suite 100
Glen Mills, Pennsylvania 19342
610.358.9363 fax 610.358.9372

REV	DATE	DESCRIPTION	BY
3	2/8/2015	REVISE PLAN PER TOWNSHIP CONSULTANT REVIEWS, NPDES PERMIT REVIEW	E.J.J.
2	10/25/2014	REVISED GRADING, REVISED SANITARY SEWER DESIGN, REVISED SWM	E.J.J.
1	9/10/2014	REVISED PER TWP 8-11-14 AND 8-18-14 REVIEW LETTERS	

date: 7/21/2014
scale: AS NOTED
drawn by: M.J.B.
checked by: E.J.J.
dwg. name: F-Profile.dwg
project no: N/A

SHIRTZ FARM
110 SPROUL ROAD
EAST WHITELAND TOWNSHIP
CHESTER COUNTY, PENNSYLVANIA

LOW PRESSURE SANITARY SEWER PLAN & PROFILES (2 OF 2)

This document and all information and work product represented by and contained herein, is the sole and exclusive property of James C. Kelly & Associates, Inc. t/a Kelly & Close Engineers. The information contained herein shall not be used, reproduced, or disclosed to any party without express written permission of James C. Kelly & Associates, Inc. or its authorized representative. Any unauthorized use, disclosure or modification to this document by any party or for any purpose without the express written authority is extended, directly or implied, to any party or for any purpose whatsoever.
Copyright, 2015, James C. Kelly & Associates, Inc.
All rights reserved

SHEET 08 of 24

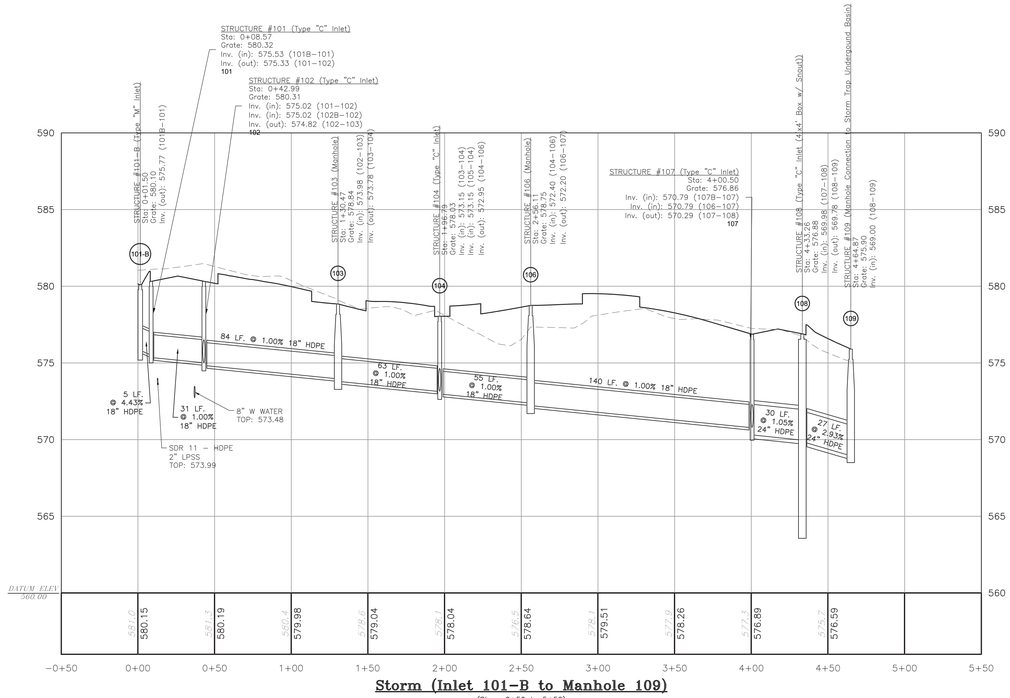

Storm (Inlet 101-B to Manhole 109)
(Sta. -0+50 to 5+50)
Scale:
1" = 40' Horizontal; 1" = 4' Vertical

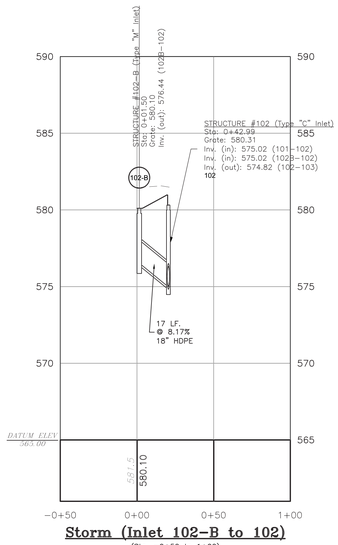

Storm (Inlet 102-B to 102)
(Sta. -0+50 to 1+00)
Scale:
1" = 40' Horizontal; 1" = 4' Vertical

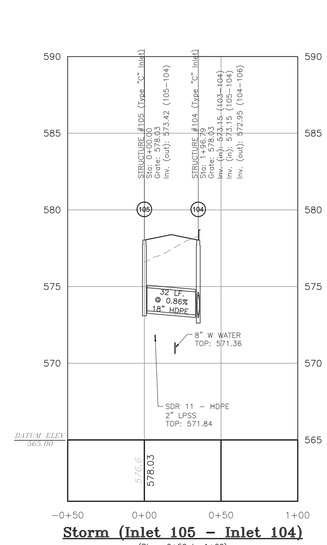

Storm (Inlet 105 - Inlet 104)
(Sta. -0+50 to 1+00)
Scale:
1" = 40' Horizontal; 1" = 4' Vertical

STORM STRUCTUTRE TABLE			
Structure ID	Structure Type	Rim Elevation	Sump Elevation
CO-3	MANHOLE	576.08	571.08
CO-4	MANHOLE	577.54	567.50
CO-1	MANHOLE	577.55	572.55
101-B	TYPE "M" INLET	580.10	575.77
101	TYPE "C" INLET	580.32	575.33
102-B	TYPE "M" INLET	580.10	576.44
102	TYPE "C" INLET	580.31	574.82
103	MANHOLE	578.84	573.78
104	TYPE "C" INLET	578.03	572.95
105	TYPE "C" INLET	578.03	573.42
106	MANHOLE	578.75	572.20
107-B	TYPE "M" INLET	576.00	571.78
107	TYPE "C" INLET	576.86	570.29
108	TYPE "C" INLET (4'X4' BOX W/ SNOUT)	576.88	564.15
109	MANHOLE CONNECTION TO STORM TRAP UNDERGOUND BASIN	575.90	569.00
301	TYPE "C" INLET	572.99	570.24
302	TYPE "C" INLET	573.01	569.88
303	TYPE "M" INLET (4'X4' BOX W/SNOUT)	573.50	565.41
304	MANHOLE CONNECTION TO STORM TRAP UNDERGOUND BASIN	574.16	569.00
401	MANHOLE	575.25	569.00
402	TYPE "C" INLET	571.92	568.72
403	TYPE "M" INLET	571.99	567.84
404	EX. INLET	570.43	567.47

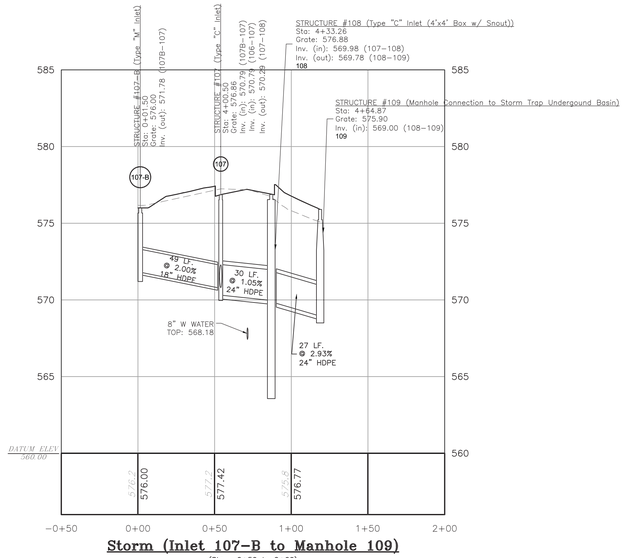

Storm (Inlet 107-B to Manhole 109)
(Sta. -0+50 to 2+00)
Scale:
1" = 40' Horizontal; 1" = 4' Vertical

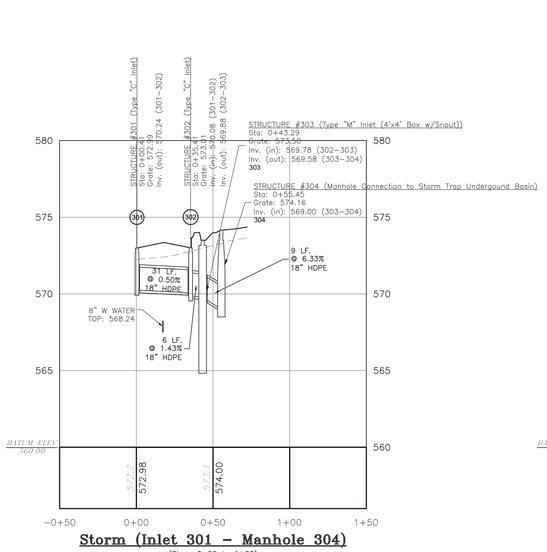

Storm (Inlet 301 - Manhole 304)
(Sta. -0+50 to 1+50)
Scale:
1" = 40' Horizontal; 1" = 4' Vertical

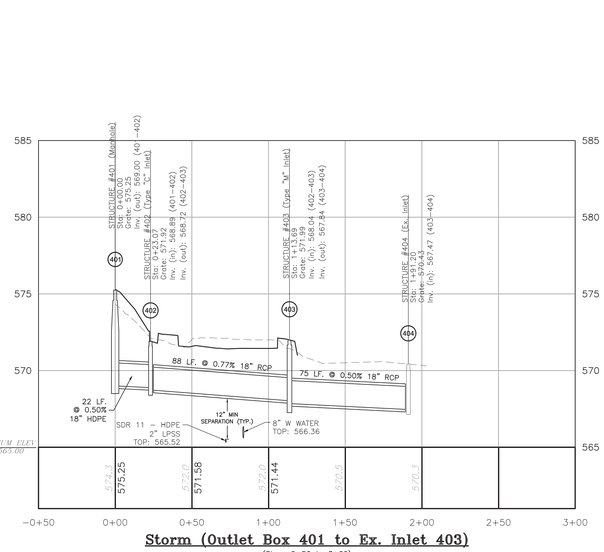

Storm (Outlet Box 401 to Ex. Inlet 403)
(Sta. -0+50 to 3+00)
Scale:
1" = 40' Horizontal; 1" = 4' Vertical

STORM PIPE TABLE							
NAME	SIZE	MATERIAL	LENGTH	INV. UP	INV. DN	SLOPE	"n" FACTOR
101B-101	18"	HDPE	5.42'	575.77	575.53	4.43%	0.013
101-102	18"	HDPE	31.48'	575.33	575.02	1.00%	0.013
102B-102	18"	HDPE	17.37'	576.44	575.02	8.17%	0.013
102-103	18"	HDPE	83.56'	574.82	573.98	1.00%	0.013
103-104	18"	HDPE	62.63'	573.78	573.15	1.00%	0.013
104-106	18"	HDPE	55.14'	572.95	572.40	1.00%	0.013
105-104	18"	HDPE	31.63'	573.42	573.15	0.86%	0.013
106-107	18"	HDPE	140.38'	572.20	570.79	1.00%	0.013
107B-107	18"	HDPE	49.38'	571.78	570.79	2.00%	0.013
107-108	24"	HDPE	29.93'	570.29	569.98	1.05%	0.013
108-109	24"	HDPE	26.62'	569.78	569.00	2.93%	0.013
301-302	18"	HDPE	31.50'	570.24	570.08	0.50%	0.013
302-303	18"	HDPE	6.50'	569.88	569.78	1.43%	0.013
303-304	18"	HDPE	9.17'	569.58	569.00	6.33%	0.013
401-402	18"	HDPE	22.47'	569.00	568.89	0.50%	0.013
402-403	18"	RCP	87.59'	568.72	568.04	0.77%	0.013
403-404	18"	RCP	74.55'	567.84	567.47	0.50%	0.013

PROJECT SERIAL No. : 20182490802
BEFORE YOU DIG ANYWHERE
IN... **PENNSYLVANIA**
STOP! CALL 1-800-242-1776
(TOLL FREE)
PA LAW REQUIRES 3 WORKING DAYS NOTICE FOR CONSTRUCTION PHASE AND 10 WORKING DAYS NOTICE IN DESIGN STAGE PENNSYLVANIA ONE CALL SYSTEM, Inc.

ALL TRENCHING, SHEETING AND SHORING SHALL BE IN STRICT ACCORDANCE WITH OSHA STANDARDS

PROFESSIONAL ENGINEER CERTIFICATION
COMMONWEALTH OF PENNSYLVANIA
ERIC J. JANETKA
ENGINEER
No. 049855
PROFESSIONAL ENGINEER
7/21/2014

K&C
KELLY & CLOSE ENGINEERS
CONSULTING ENGINEERS & SURVEYORS
The Summit at Brandywine
One Westtown Road, Suite 200
Glen Mills, Pennsylvania 19342
610.358.9363 fax 610.358.9372

REV	DATE	DESCRIPTION	BY
3	2/8/2018	REVISE PLAN PER TOWNSHIP CONSULTANT REVIEWS, NPDES PERMIT REVIEW	E.J.J.
2	10/25/2018	REVISED GRADING, REVISED SANITARY SEWER DESIGN, REVISED SWM	E.J.J.
1	9/10/2014	REVISED PER TWP 8-11-14 AND 8-18-14 REVIEW LETTERS	E.J.J.

date: 7/21/2014
scale: AS NOTED
drawn by: M.J.B.
checked by: E.J.J.
dwg. name: E-Profile-Strm.dwg
project no: N/A

SHIRTZ FARM
110 SPROUL ROAD
EAST WHITELAND TOWNSHIP
CHESTER COUNTY, PENNSYLVANIA

STORM SEWER PROFILES

This document and all information and work product represented by and contained herein, is the sole and exclusive property of James C. Kelly & Associates, Inc. t/a Kelly & Close Engineers. The information contained herein shall not be used, reproduced, revised, or altered in any manner or for any purpose without express written permission of James C. Kelly authority is extended, directly or implied, to any party without such permission.
Copyright, 2015, James C. Kelly & Associates, Inc.
All rights reserved

SHEET 09 of 24

STORM SEWER SYSTEMS INSPECTION AND MAINTENANCE REQUIREMENTS:

1. REMOVAL AND DISPOSAL OF TRASH AND DEBRIS: ONCE EVERY 3 MONTHS AND AFTER ALL MAJOR STORMS, TRASH AND DEBRIS SHOULD BE REMOVED FROM THE STORM SEWER SYSTEMS (i.e., STRUCTURES AND INLET GRATES) TO PREVENT THE COMPONENTS FROM BECOMING CLOGGED OR INOPERABLE DURING STORM EVENTS. DISPOSAL OF TRASH AND DEBRIS MUST COMPLY WITH ALL LOCAL, STATE, COUNTY AND FEDERAL REGULATIONS. ONLY SUITABLE DISPOSAL AND RECYCLING SITES SHOULD BE USED.
2. ICE AND SNOW REMOVALS: SNOW AND ICE ACCUMULATIONS SHOULD BE MONITORED AND REMOVED FROM INLET GRATES AND THE INLETS AND OUTLETS OF STORM SEWER SYSTEMS TO ASSURE THE CONTINUED FUNCTIONING DURING THE WINTER MONTHS.
3. DAMAGE REPAIRS: ONCE EVERY YEAR AND AFTER ALL MAJOR STORMS, ALL COMPONENTS OF THE STORM SEWER SYSTEMS (i.e., STRUCTURES, PIPES, AND INLET GRATES) SHALL BE INSPECTED FOR ANY DAMAGE AND OPERATIONAL PROBLEMS AND REPAIRS SHALL BE MADE AS NECESSARY TO RESTORE THEIR NORMAL OPERATION.

STORMWATER MANAGEMENT FACILITIES INSPECTION & MAINTENANCE REQUIREMENTS:

I. SUBSURFACE SEEPAGE BEDS / DETENTION FACILITIES
1. INFLOW STRUCTURES SEDIMENT REMOVAL: ONCE EVERY 3 MONTHS AND AFTER ALL MAJOR STORMS, INSPECT ALL SEEPAGE BEDS INFLOW STRUCTURES (WATER QUALITY STRUCTURES) FOR SEDIMENT ACCUMULATION AND REMOVE SEDIMENTS IF NECESSARY FOLLOWING THESE STEPS; REMOVE GRATE OR COVER AND SKIM OFF OILS AND FLOATABLES. USING A STADIA ROD, MEASURE DEPTH OF SEDIMENT. IF SEDIMENT IS GREATER THAN 6" DEEP, VACUUM OR MANUALLY REMOVE SEDIMENT. REPLACE GRATE OR COVER.
2. OUTFLOW / OVERFLOW STRUCTURES TRASH/DEBRIS REMOVAL: ONCE EVERY 3 MONTHS AND AFTER ALL MAJOR STORMS, INSPECT INSIDE OF ALL SEEPAGE BEDS OUTFLOW / OVERFLOW STRUCTURES AND REMOVE TRASH AND DEBRIS AS NECESSARY TO ENSURE UNCLOGGED OPERATION.
3. DAMAGE REPAIRS: ONCE EVERY YEAR AND AFTER ALL MAJOR STORMS, ALL COMPONENTS OF SEEPAGE BEDS INFLOW AND OUTFLOW / OVERFLOW STRUCTURES SHALL BE INSPECTED FOR ANY DAMAGE AND REPAIRS SHALL BE MADE AS NECESSARY TO RESTORE THEIR NORMAL OPERATION AND STRUCTURAL INTEGRITY. (NOTE: IN THIS STEP, IF REPLACEMENT OF SNOUT HOOD BECOMES NECESSARY, THEN SEEPAGE BED MANIFOLD INTERIOR SHALL BE INSPECTED USING A FLASH LIGHT FOR ANY SEDIMENT ACCUMULATION AND DAMAGE. ANY SEDIMENT REMOVAL AND/OR DAMAGE REPAIR NEEDS OBSERVED DURING THIS INSPECTION SHALL BE DISCUSSED WITH STORMTECH SYSTEMS MANUFACTURER AND ATTENDED TO AS ADVISED.)

II. WATER QUALITY STRUCTURES
1. SEDIMENT REMOVAL: ONCE EVERY 3 MONTHS AND AFTER ALL MAJOR STORMS, INSPECT ALL WATER QUALITY STRUCTURES FOR SEDIMENT ACCUMULATION AND REMOVE SEDIMENTS IF NECESSARY FOLLOWING THE STEPS GIVEN BELOW:
a) REMOVE GRATE OR COVER.
b) SKIM OFF OILS AND FLOATABLES.
c) USING A STADIA ROD, MEASURE DEPTH OF SEDIMENT.
d) IF SEDIMENT IS GREATER THAN 6" DEEP, VACUUM OR MANUALLY REMOVE SEDIMENT.
e) REPLACE GRATE OR COVER.

III. ROOF DRAIN COLLECTION SYSTEMS
ANNUALLY AND AFTER 100–YEAR STORM EVENTS, THE FOLLOWING INSPECTION AND MAINTENANCE SHALL BE PERFORMED: INSPECT GUTTERS, DOWNSPOUTS, ROOF DOWNSPOUT FILTERS, AND ANY VISIBLE COMPONENTS OF ROOF DRAIN COLLECTION SYSTEM FOR
DAMAGE. CLEAN ROOF DOWNSPOUT FILTER AND ANY DEBRIS FROM GUTTER PROTECTION GUARD. CLEAN ANY ROOF DRAIN CLOGS THAT MAY OCCASIONALLY OCCUR.

IV. NATIVE SPECIES USE: LANDSCAPING DESIGN HAS INCLUDED NATIVE SPECIES TO THE MAXIMUM EXTENT POSSIBLE TO LOWER USE OF FERTILIZERS TO REDUCE NITROGEN LOAD IN RUNOFF. ACCORDINGLY, MAINTENANCE OF ALL LANDSCAPING AND VEGETATION SHALL BE DONE USING NATIVE SPECIES TO MAXIMUM EXTENT POSSIBLE.

GRASS SWALES

GENERAL MAINTENANCE NOTES
1. MAINTENANCE ACTIVITIES TO BE DONE ANNUALLY AND WITHIN 48 HOURS AFTER A MAJOR STORM EVENT (GREATER THAN 1" RAINFALL DEPTH).
2. INSPECT AND CORRECT EROSION PROBLEMS, DAMAGE TO VEGETATION AND SEDIMENT OR DEBRIS ACCUMULATION. RE–ESTABLISH GROUND COVER (SEED OR PLUGS) WITH EROSION CONTROL BLANKET AS A TEMPORARY COVER. PLANT ALTERNATIVE GROUND COVER SPECIES IF THE CAUSE IS UNSUCCESSFUL GROUND COVER ESTABLISHMENT.
3. CHECK FOR POOLS OR STANDING WATER. DEWATER AND TAKE CORRECTIVE ACTION (INCLUDING BUT NOT LIMITED TO REGRADING TO RESTORE ORIGINAL GRADES OR REPLACEMENT OF TOPSOIL).
4. MOW AND TRIM VEGETATION TO ENSURE SAFETY, FUNCTION AND AESTHETICS. CLEAR ANY ACCUMULATED LITTER PRIOR TO MOWING. MOW ONLY WHEN SWALE IS DRY AND WILL NOT RUT.
5. REGULAR MOWING SHOULD BE APPROPRIATE TO GROUND COVER REQUIREMENTS (GRASSES SHOULD BE MOWED TO A DEPTH OF 3"–5", PERENNIALS SHOULD NOT BE MOWED). DURING THE WINTER MONTHS, MOW GROUND COVER (REGARDLESS OF SPECIES) TO A HEIGHT OF 2" TO ENCOURAGE RE–ESTABLISHMENT OF PERENNIALS AND GRASSES.

CONSTRUCTION SEQUENCE NOTES
1. BEGIN VEGETATED SWALE CONSTRUCTION ONLY WHEN THE UP GRADIENT TEMPORARY EROSION AND SEDIMENT CONTROL MEASURES ARE IN PLACE.
2. ROUGH GRADE THE VEGETATED SWALE. EQUIPMENT SHALL AVOID EXCESSIVE COMPACTION AND OR LAND DISTURBANCE.
3. FINE GRADE SWALE.
4. SEED, VEGETATE AND INSTALL PROTECTIVE LINING AS PER APPROVED PLANS AND ACCORDING TO FINAL PLANTING LIST. PLANT THE SWALE AT A TIME OF YEAR WHEN SUCCESSFUL ESTABLISHMENT WITHOUT IRRIGATION IS MOST LIKELY. VEGETATION SHOULD BE ESTABLISHED AS SOON AS POSSIBLE TO PREVENT EROSION AND SCOUR.
5. ONCE ALL TRIBUTARY AREAS ARE SUFFICIENTLY STABILIZED, REMOVE TEMPORARY EROSION AND SEDIMENT CONTROLS.
6. IF SWALES ARE USED FOR RUNOFF CONVEYANCE DURING CONSTRUCTION, IT SHOULD BE REGRADED AND RESEEDED IMMEDIATELY AFTER CONSTRUCTION ANDS STABILIZATION HAS OCCURRED. ANY DAMAGED AREA SHOULD BE FULLY RESTORED TO ENSURE FUTURE FUNCTIONALITY OF THE SWALE.

RECYCLING OR DISPOSAL NOTE:

1. THE CONTRACTOR IS RESPONSIBLE FOR THE PROPER RECYCLING AND DISPOSAL OF ALL MATERIALS PER CHAPTER 102.4(B)95)(XI).
2. THE OPERATOR SHALL REMOVE FROM THE SITE, RECYCLE, OR DISPOSE OF ALL BUILDING MATERIALS AND WASTES IN ACCORDANCE WITH THE DEPARTMENT'S SOLID WASTE MANAGEMENT REGULATIONS AT 25 PA. CODE 260.1 ET SEQ., 271.1 ET SEQ., AND 287.1 ET SEQ. THE CONTRACTOR SHALL NOT ILLEGALLY BURY, DUMP OR DISCHARGE ANY BUILDING MATERIAL OR WASTES AT THE SITE.

ENVIRONMENTAL DUE DILIGENCE DEFINITION

TAKEN FROM "INSTRUCTIONS FOR A GENERAL (PAG–2) OR INDIVIDUAL NPDES PERMIT FOR STORM WATER DISCHARGES ASSOCIATED WITH CONSTRUCTION ACTIVITIES", PREPARED BY THE PENNSYLVANIA DEPARTMENT OF ENVIRONMENTAL PROTECTION, DATED MAY 2007.

THE APPLICANT MUST PERFORM ENVIRONMENTAL DUE DILIGENCE TO DETERMINE IF THE FILL MATERIALS ASSOCIATED WITH THE PROJECT QUALIFY AS CLEAN FILL. ENVIRONMENTAL DUE DILIGENCE IS DEFINED AS:

"INVESTIGATIVE TECHNIQUES, INCLUDING, BUT NOT LIMITED TO, VISUAL PROPERTY INSPECTIONS, ELECTRONIC DATA BASE SEARCHES, REVIEW OF PROPERTY OWNERSHIP, REVIEW OF PROPERTY USE HISTORY, SANBORN MAPS, ENVIRONMENTAL QUESTIONNAIRES, TRANSACTION SCREENS, ANALYTICAL TESTING, ENVIRONMENTAL ASSESSMENTS OR AUDITS. ANALYTICAL TESTING IS NOT A REQUIRED PART OF DUE DILIGENCE UNLESS VISUAL INSPECTION AND/OR REVIEW OF THE PAST LAND USE OF THE PROPERTY INDICATES THAT THE FILL MAY HAVE BEEN SUBJECTED TO A SPILL OR RELEASE OF REGULATED SUBSTANCE. IF THE FILL MAY HAVE BEEN AFFECTED BY A SPILL OR RELEASE OF A REGULATED SUBSTANCE, IT MUST BE TESTED TO DETERMINE IF IT QUALIFIES AS CLEAN FILL. TESTING MUST BE PERFORMED IN ACCORDANCE WITH APPENDIX A OF THE DEPARTMENT'S POLICY "MANAGEMENT OF FILL".

FILL MATERIAL THAT DOES NOT QUALIFY AS CLEAN FILL IS REGULATED FILL. REGULATED FILL IS WASTE AND MUST BE MANAGED IN ACCORDANCE WITH THE DEPARTMENT'S MUNICIPAL OR RESIDUAL WASTE REGULATIONS BASED ON 25 PA. CODE CHAPTERS 287 RESIDUAL WASTE MANAGEMENT OR 271 MUNICIPAL WASTE MANAGEMENT, WHICHEVER IS APPLICABLE. THESE REGULATIONS ARE AVAILABLE ON–LINE AT WWW.PACODE.COM.

THE CRITICAL STAGES OF THIS PROJECT THAT INCLUDE ENGINEERING OVERSIGHT ARE THE INSTALLATION OF ON LOT INFILTRATION FACILITIES AND THE MAIN INFILTRATION FACILITY LOCATED AT THE FRONT OF THE SITE, AS WELL AS THE CONSTRUCTION OF VEGETATIVE SWALES, LANDSCAPE RESTORATION AND INSTALLATION OF AMENDED SOIL AS SHOWN ON THE PCSM PLAN.

TYPICAL STORMWATER MANAGEMENT FACILITIES CONSTRUCTION SEQUENCE:

1. CLEAR AND GRUB AREA FOR SUBSURFACE INFILTRATION BED INSTALLATION.
2. EXCAVATE AREA FOR BED INSTALLATION. NATIVE SOIL BELOW BED SHALL BE MAINTAINED TO THE GREATEST EXTENT POSSIBLE. CONSTRUCTION EQUIPMENT SHALL BE PROHIBITED FROM ENTERING THE BED BOTTOM AREA. USE ONLY LOW–PRESSURE TRACK–MOUNTED VEHICLES / EQUIPMENT IN THE BED BOTTOM AREA TO AVOID LOSS OF INFILTRATION CAPACITY DUE TO COMPACTION OF UNDERLYING SOILS. IF FILL IS REQUIRED IN THE BED BOTTOM AREA, IT SHALL BE COMPACTED AS MINIMALLY AS POSSIBLE. THIS IS A CRITICAL STAGE OF THE IMPLEMENTATION OF THE PROJECT'S BMPs AND A LICENSED PROFESSIONAL OR DESIGNEE SHALL PROVIDE APPROPRIATE SUPERVISION DURING THIS ENTIRE STEP.
3. INSTALL GEOTEXTILE FABRIC AROUND SIDES AND BOTTOM OF BED. THIS IS A CRITICAL STAGE OF THE IMPLEMENTATION OF THE PROJECT'S BMPs AND A LICENSED PROFESSIONAL OR DESIGNEE SHALL PROVIDE APPROPRIATE SUPERVISION DURING THIS ENTIRE STEP.
4. INSTALL 6–INCH LAYER OF CLEAN STONES. THIS IS A CRITICAL STAGE OF THE IMPLEMENTATION OF THE PROJECT'S BMPs AND A LICENSED PROFESSIONAL OR DESIGNEE SHALL PROVIDE APPROPRIATE SUPERVISION DURING THIS ENTIRE STEP.
5. INSTALL STORMTECH CHAMBERS AND CONNECT TO MANIFOLD PIPING TO MAIN BED AND PERFORATED PIPING TO INDIVIDUAL ON LOT BEDS. THIS IS A CRITICAL STAGE OF THE IMPLEMENTATION OF THE PROJECT'S BMPs AND A LICENSED PROFESSIONAL OR DESIGNEE SHALL PROVIDE APPROPRIATE SUPERVISION DURING THIS ENTIRE STEP.
6. INSTALL REMAINING CLEAN STONES IN MAXIMUM 9–INCH LIFTS AND COMPACT. THIS IS A CRITICAL STAGE OF THE IMPLEMENTATION OF THE PROJECT'S BMPs AND A LICENSED PROFESSIONAL OR DESIGNEE SHALL PROVIDE APPROPRIATE SUPERVISION DURING THIS ENTIRE STEP.
7. LINE TOP OF BED WITH GEOTEXTILE FABRIC. THIS IS A CRITICAL STAGE OF THE IMPLEMENTATION OF THE PROJECT'S BMPs AND A LICENSED PROFESSIONAL OR DESIGNEE SHALL PROVIDE APPROPRIATE SUPERVISION DURING THIS ENTIRE STEP.
8. INSTALL AMENDED SOIL IN LOCATIONS SHOWN ON THIS PLAN. BACKFILL TO FINISHED GRADE OR BOTTOM OF PAVING SECTION. THIS IS A CRITICAL STAGE OF THE IMPLEMENTATION OF THE PROJECT'S BMPs AND A LICENSED PROFESSIONAL OR DESIGNEE SHALL PROVIDE APPROPRIATE SUPERVISION DURING THIS ENTIRE STEP.
9. PUMP OUT WATER QUALITY STRUCTURE, REMOVE ANY ACCUMULATED SEDIMENT, AND REMOVE PLUG FROM INFLOW MANIFOLD PIPING. THIS IS A CRITICAL STAGE OF THE IMPLEMENTATION OF THE PROJECT'S BMPs AND A LICENSED PROFESSIONAL OR DESIGNEE SHALL PROVIDE APPROPRIATE SUPERVISION DURING THIS ENTIRE STEP.

SOIL AMENDED/RESTORATION SEQUENCE OF CONSTRUCTION:

1. GRADE SURFACE TO FINISHED GRADE ELEVATIONS AS SOON AS PRACTICAL FOLLOWING COMPLETION OF INFILTRATION FACILITY INSTALLATION.
2. IN THE DESIGNATED SOIL AMENDED AREAS, TILL THE GROUND AND MIX IN SOIL COMPOST TO DEPTH INDICATED ON PLANS. THIS IS A CRITICAL STEP WHICH REQUIRES OVERSIGHT BY A LICENSED PROFESSIONAL.
3. IMMEDIATELY SEE AND MULCH DISTURBED AREAS ONCE FINAL GRADE IS ESTABLISHED IN ACCORDANCE WITH THE PERMANENT SEEDING SCHEDULE.
4. MAINTAIN EROSION AND SEDIMENTATION CONTROL DEVISES UNTIL SITE WORK IS COMPLETE AND A UNIFORM 70% PERENNIAL VEGETATIVE COVER IS ESTABLISHED.

SOIL AMENDMENT AND RESTORATION INSPECTION/MAINTENANCE PROCEDURES:

1. THE SOIL RESTORATION PROCESS MAY NEED TO BE REPEATED OVER TIME, DUE TO COMPACTION BY USE AND/OR SETTLING.
2. SOIL AMENDMENT AREA SHALL BE INSPECTED AT LEAST 4 TIMES PER YEAR FOR SIGNS OF COMPACTION. TO REMEDY COMPACTION, TILL THE SOIL 12" AND MIX IN COMPOST.

SOIL COMPACTION NOTE:

1. THE GOAL OF MINIMIZING SOIL COMPACTION IS TO PROTECT DISTURBED SOIL AREAS FROM EXCESSIVE COMPACTION AND EROSION DURING CONSTRUCTION, AVOIDANCE OF LARGE CLEARED AREAS AND STOCKPILING OF TOPSOIL, USING QUALITY TOPSOIL, MAINTAINING SOIL QUALITY AFTER CONSTRUCTION, REDUCING SITE DISTURBANCE THROUGH DESIGN AND PROPER CONSTRUCTION PRACTICE AND SEQUENCING. MINIMIZING SOIL COMPACTION AND ENSURING TOPSOIL QUALITY CAN IMPROVE WATER QUALITY THROUGH INFILTRATION AND INCREASED EVAPOTRANSPIRATION.

LANDSCAPE RESTORATION NOTE:

1. THE GOAL OF LANDSCAPE RESTORATION IS TO MINIMIZE TRADITIONAL TURF LAWN AREA, MAXIMIZE LANDSCAPE RESTORATION AREA PLANTED WITH NATIVE VEGETATION, PROTECT LANDSCAPE RESTORATION AREA DURING CONSTRUCTION, PREVENT POST CONSTRUCTION EROSION THROUGH ADEQUATE STABILIZATION, MINIMIZE FERTILIZER AND CHEMICAL BASED PEST CONTROL, CREATE AND MAINTAIN POROUS SURFACE AND HEALTHY SOIL.

LANDSCAPE CONSTRUCTION SEQUENCE & MAINTENANCE NOTE:

1. PREPARE SITE BY ELIMINATING ALL WEEDS OR VEGETATION PRIOR TO SEEDING.
2. PLANTING SHALL TAKE PLACE FROM SPRING THAW THROUGH JUNE 30 OF FROM SEPTEMBER 1 THROUGH SOIL FREEZE–UP (DORMANT SEEDING).
3. SEASONAL MOWING MAY BE REQUIRED. CARE MUST BE TAKEN TO MAKE SURE THAT ANY MANAGEMENT IS COORDINATED WITH ESSENTIAL RESEEDING AND OTHER IMPORTANT ASPECTS OF MEADOW REESTABLISHMENT.
4. IN THE FIRST YEAR, WEEDS MUST BE CAREFULLY CONTROLLED AND CONSISTENTLY MOVED BACK TO 4–6 INCHES TALL WHEN THEY REACH 12 INCHES IN HEIGHTS.
5. IN THE SECOND YEAR, WEEDS SHOULD BE CONTINUED TO BE MONITORED AND MOWED, AND IF NEEDED, HAND TREATED WITH HERBICIDE. WEEDS SHOULD NOT BE SPRAYED WITH HERBICIDE AS THE DRIFT FROM THE SPRAY MAY KILL LARGE PATCHES OF DESIRABLE PLANTS, ALLOWING WEEDS TO MOVE INTO THESE AREAS.

INSPECTION REQUIREMENTS:

INSPECTIONS: A QUALIFIED INSPECTOR SHOULD PERFORM INSPECTIONS OF THE FACILITIES ON A REGULARLY SCHEDULED BASIS. THE INSPECTIONS SHOULD ASCERTAIN THE OPERATIONAL CONDITION, SAFETY OF THE FACILITY AND THE EFFECTIVENESS OF THE PREVENTATIVE MAINTENANCE PROGRAM. BASED ON THE INSPECTION RESULTS, AN INSPECTION REPORT SHOULD BE GENERATED LISTING POTENTIAL MAINTENANCE PROBLEMS. IN ADDITION, A RECOMMENDED TIMELINE FOR REPAIR SHOULD BE ESTABLISHED. CORRECTIVE MAINTENANCE SHOULD BE PERFORMED WITHIN THE RECOMMENDED REPAIR PERIOD TO PREVENT FURTHER DAMAGE, OR DECLINE OF THE FACILITY.

INSPECTION RECORD: RECORD SHOULD BE KEPT OF ALL MAINTENANCE WORK AND INSPECTION PERFORMED FOR THE STORMWATER MANAGEMENT FACILITIES. ALONG WITH THE WRITTEN REPORTS, A CHAIN OF COMMAND FOR REPORTING AND RESOLVING MAINTENANCE PROBLEMS SHOULD BE ESTABLISHED.

OWNERSHIP AND OPERATION/INSPECTION/MAINTENANCE RESPONSIBILITY NOTES

1. THE STORM SEWER SYSTEMS, BMP'S (INFILTRATION FACILITIES AND VEGETATIVE SWALES), ETC. LOCATED IN OPEN SPACE/EASEMENT AREAS ARE THE RESPONSIBILITY (i.e., OPERATION / INSPECTION / MAINTENANCE) OF THE HOME OWNERS ASSOCIATION OR SUBSEQUENT SITE OWNERS.
2. INDIVIDUAL ON LOT STORM SEWER SYSTEMS AND INLETS, BMP'S (INFILTRATION FACILITIES AND VEGETATIVE SWALES), ETC. LOCATED ON EACH INDIVIDUAL LOT, SHALL BE THE RESPONSIBILITY (i.e., OPERATION / INSPECTION / MAINTENANCE) OF EACH INDIVIDUAL LOT PROPERTY OWNER.

GENERAL INSPECTION AND MAINTENANCE NOTES

1. STORMWATER BMPs SHALL BE INSPECTED TO ENSURE THAT THEY CONTINUE TO REFLECT THE DESIGN / SPECIFICATIONS SHOWN IN THE APPROVED CONSTRUCTION PLANS.
2. INSPECTIONS SHALL BE PERFORMED BY INDIVIDUALS QUALIFIED TO INSPECT THE APPLICABLE TYPE OF FACILITIES AND FAMILIAR WITH THEIR DESIGN AND PERFORMANCE REQUIREMENTS SO THAT MAINTENANCE AND/OR REPAIRS CAN BE PROPERLY IDENTIFIED. MAINTENANCE AND/OR REPAIR WORK SHALL ALSO BE INSPECTED BY SUCH INDIVIDUALS TO ENSURE ITS SATISFACTORY COMPLETION.
3. MAINTENANCE AND/OR REPAIR WORK SHALL BE COMPLETED TO RESTORE THE FACILITIES TO THEIR ORIGINAL DESIGN IN ACCORDANCE WITH CONSTRUCTION DETAILS AND SPECIFICATIONS INCLUDED IN THE ORIGINAL CONSTRUCTION PLANS.
4. SEDIMENT, TRASH, DEBRIS AND/OR DAMAGED MATERIALS COLLECTED DURING MAINTENANCE SHALL BE DISPOSED OF IN AN ACCEPTABLE MANNER IN ACCORDANCE WITH APPLICABLE LAW(S) AND REGULATION(S).
5. VEHICLES SHOULD NOT BE PARKED OR DRIVEN OVER INFILTRATION BMP'S.
6. PER THE BMP MANUAL, PROTOCOL 2 "FAILURE" FOR INFILTRATION SYSTEMS WITH VEGETATIVE SURFACES, SUCH AS RAIN GARDENS MAY INCLUDE THE INABILITY TO SUPPORT SURFACE VEGETATION CAUSED BY TOO MUCH OR TOO LITTLE WATER. FAILURE CAN ALSO OCCUR WHEN INFILTRATION FACILITIES DO NOT DEWATER PER THE DESIGNED/APPROVED RATE OR EXCEED THE MAXIMUM DEWATERING TIME OF 72 HOURS. THE FOLLOWING STEPS WILL REDUCE THE CHANCE OF FAILURE:
   - THE CONTRACTOR SHALL USE PROPER CONSTRUCTION TECHNIQUES TO AVOID SOIL COMPACTING/SMEARING WHICH RESULT IN SIGNIFICANTLY REDUCED INFILTRATION RATES
   - THE CONTRACTOR SHALL STABILIZE THE SITE AND SOIL CONDITIONS PRIOR TO BMP'S RECEIVING RUNOFF, WHICH GREATLY INCREASES THE POTENTIAL FOR SEDIMENT CLOGGING FROM CONTIGUOUS LAND SURFACES.
   - THE CONTRACTOR SHALL PROVIDE ADEQUATE PRETREATMENT, ESPECIALLY OF SEDIMENT LADEN RUNOFF, WHICH CAN CAUSE A GRADUAL REDUCTION OF INFILTRATION RATES.
   - THE CONTRACTOR AND FUTURE HOME OWNER SHALL PROVIDE PROPER MAINTENANCE (EROSION REPAIR, RE–VEGETATION, ETC) WHICH CAN REDUCE THE LONGEVITY OF INFILTRATION BMP'S
   - THE ENGINEERS SHALL DESIGN ADEQUATE BMP TO ADDRESS SITE RUNOFF REQUIREMENTS.
7. A BLANKET ACCESS EASEMENT IS GRANTED TO EAST WHITELAND TOWNSHIP AND THE CHESTER COUNTY CONSERVATION DISTRICT FOR THE INSPECTION AND POSSIBLE EMERGENCY MAINTENANCE OF STORMWATER MANAGEMENT FACILITIES PER THE PA BMP MANUAL AND THE POST CONSTRUCTION STORMWATER MANAGEMENT PLAN.

NOTE: OVERFLOW (EXCEEDING A 100 YR STORM EVENT) FOR POI #1 WILL FLOW TO AN EXISTING INLET ALONG SPROUL ROAD, ADJACENT TO THE SITE; POI #3 AND #4 WILL FLOW TO AN EXISTING CULVERT UNDER KING ROAD; POI #4 WILL FLOW TO AN EXISTING INLET ALONG SPROUL ROAD ADJACENT TO THE RAILWAY LINE. SEE OFFSITE DISCHARGE ANALAYIS/MAP INCLUDED IN STORMWATER MANAGEMENT REPORT.

PROPOSED BMP'S:
- INFILTRATION BEDS (#1, #3, #4/5, #6/7, #8/9/10, #11 AND MAIN BED)
- ROOF TOP DISCONNECT (VARIOUS LOTS INDICATED ON THIS PLAN)
- VEGETATIVE SWALE, BMP 6.4.8 (#1, #4/5. #4–2, #6/7, #8/9, #10 AND #12/13)
- LANDSCAPE RESTORATION, BMP 6.7.2 (AMENDED SOILS AND MEADOW MIX – ERNMX–180 SEED)
- SOIL AMENDMENT, BMP 6.7.3 (AMENDED SOILS FOR INFILTRATION BEDS LISTED ABOVE)

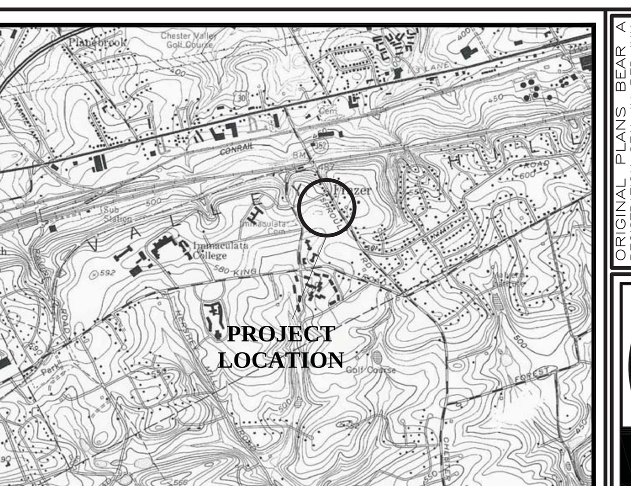

LOCATION MAP

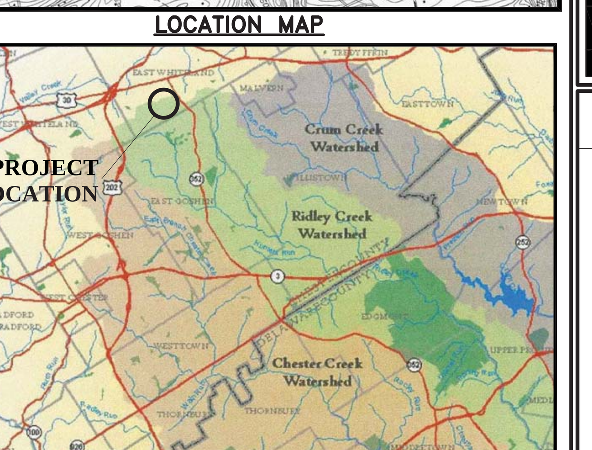

WATERSHED MAP

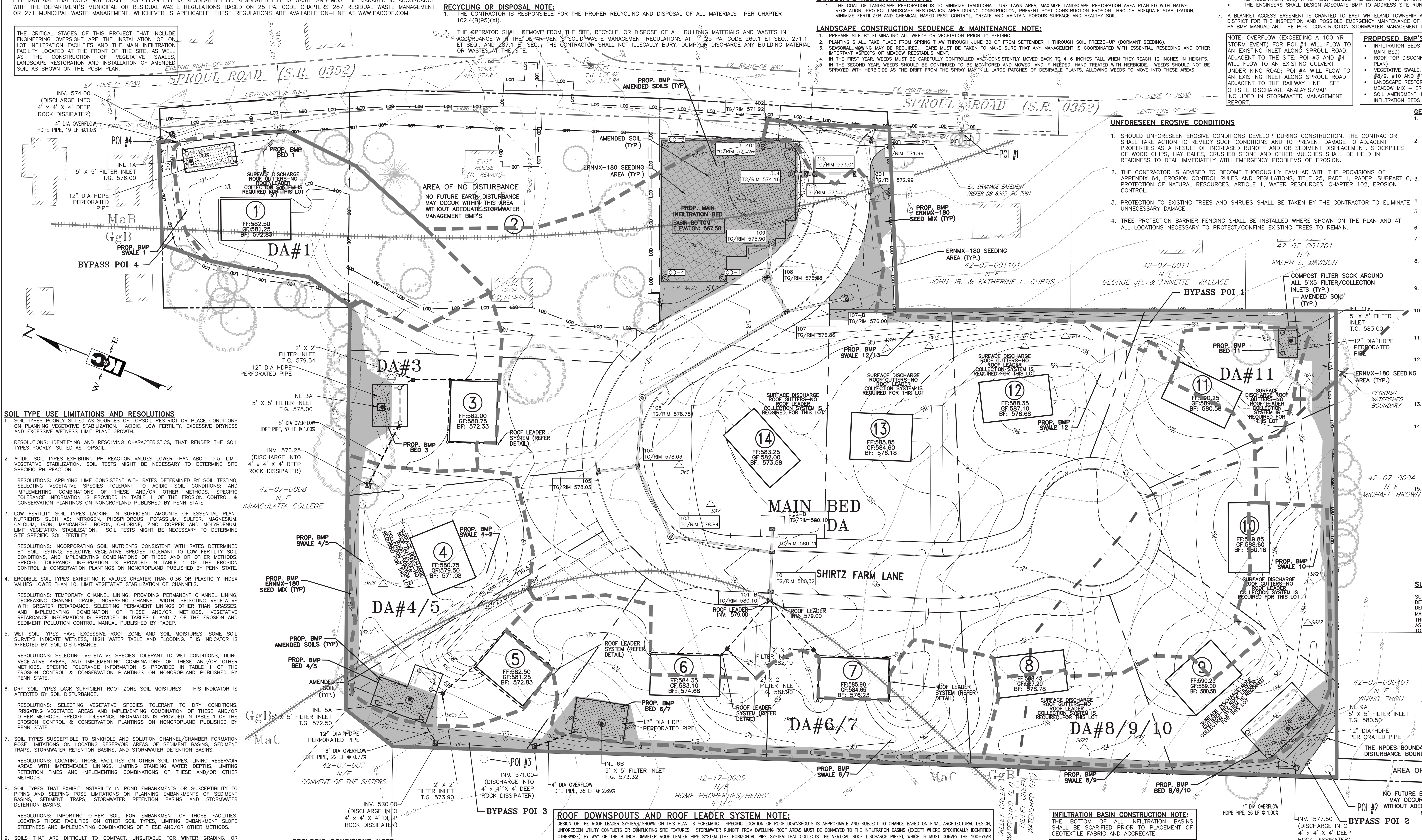

UNFORESEEN EROSIVE CONDITIONS

1. SHOULD UNFORESEEN EROSIVE CONDITIONS DEVELOP DURING CONSTRUCTION, THE CONTRACTOR SHALL TAKE ACTION TO REMEDY SUCH CONDITIONS AND TO PREVENT DAMAGE TO ADJACENT PROPERTIES AS A RESULT OF INCREASED RUNOFF AND OR SEDIMENT DISPLACEMENT. STOCKPILES OF WOOD CHIPS, HAY BALES, CRUSHED STONE AND OTHER MULCHES SHALL BE HELD IN READINESS TO DEAL IMMEDIATELY WITH EMERGENCY PROBLEMS OF EROSION.
2. THE CONTRACTOR IS ADVISED TO BECOME THOROUGHLY FAMILIAR WITH THE PROVISIONS OF APPENDIX 64, EROSION CONTROL RULES AND REGULATIONS, TITLE 25, PART 1, PADEP, SUBPART C, PROTECTION OF NATURAL RESOURCES, ARTICLE III, WATER RESOURCES, CHAPTER 102, EROSION CONTROL.
3. PROTECTION TO EXISTING TREES AND SHRUBS SHALL BE TAKEN BY THE CONTRACTOR TO ELIMINATE UNNECESSARY DAMAGE.
4. TREE PROTECTION BARRIER FENCING SHALL BE INSTALLED WHERE SHOWN ON THE PLAN AND AT ALL LOCATIONS NECESSARY TO PROTECT/CONFINE EXISTING TREES TO REMAIN.

GENERAL NOTES

1. THE AREAS OF THE PROPOSED SEEPAGE BEDS SHALL BE PROTECTED WITH 30" SILT FENCE DURING SITE CONSTRUCTION. THESE AREAS ARE TO BE CLEARLY MARKED WITH STAKES AND CONSTRUCTION FENCING AND CONSTRUCTION RUNOFF IS TO BE DIRECTED AWAY FORM THEM. ALL TREES WITHIN THESE AREAS MUST BE REMOVED BY HAND.
2. AN OPERATION AND MAINTENANCE (O&M) AGREEMENT MUST BE COMPLETE FOR EACH PRIVATELY OWNED INFILTRATION AND COLLECTION SYSTEM. UPON COMPLETION, THE O&M AGREEMENT MUST BE SIGNED AND FILED WITH THE OFFICE OF RECORDER OF DEEDS. EACH PROPERTY OWNER MUST MAINTAIN AND PRESERVE THE FULL EFFECTIVENESS OF THE STORMWATER MANAGEMENT FACILITY IN PERPETUITY AND IS NOT PERMITTED TO DAMAGE, ALTER OR REMOVE THE FACILITY. THE STORMWATER MANAGEMENT FACILITY SHALL REMAIN IN PLACE AND FUNCTION FOR THE DURATION OF THE PROPERTY USE. OWNER SHALL INSPECT FACILITIES ON A PERIODIC BASIS AND IMPLEMENT MAINTENANCE AS NECESSARY.
3. STORMWATER SEEPAGE BEDS SHALL BE FILLED WITH CLEAN STONE MEETING THE REQUIREMENTS OF FORM 408, SECTION 703 FOR AASHTO NO. 4 STONE. THE STONE SHALL BE WRAPPED IN GEOTEXTILE MEETING THE REQUIREMENTS OF PENNDOT PUBLICATION 408, SECTION 735.2, TABLE A FOR CLASS I.
4. ALL INLET BOXES AND STORM MANHOLES SHALL MEET THE REQUIREMENTS OF FORM 408, SECTION 605.
5. COMPACTION OF THE INFILTRATION BOTTOM SURFACE MUST BE AVOIDED. THE CONTRACTOR SHOULD USE LIGHTWEIGHT CONSTRUCTION EQUIPMENT AND OPERATE MACHINERY FROM OUTSIDE THE INFILTRATION FACILITY WHENEVER POSSIBLE.
6. REFER TO THE POST CONSTRUCTION STORMWATER MANAGEMENT PLAN AND DETAILS FOR INFILTRATION BED DETAILS.
7. CONTRACTOR SHALL BE RESPONSIBLE FOR ALL OPERATION AND MAINTENANCE FOR ALL EROSION AND SEDIMENT CONTROLS. THE CONTRACTOR WILL BE RESPONSIBLE FOR REPAIR, CLEANING OR REPLACEMENT OF ANY INLETS DAMAGED OR AFFECTED AS A RESULT OF SITE CONSTRUCTION AND/OR FAULTY EROSION AND SEDIMENT CONTROL MAINTENANCE.
8. DURING THE LIFE OF THE PROJECT, ALL EROSION AND SEDIMENTATION CONTROLS DEVISED MUST BE PROPERLY MAINTAINED. MAINTENANCE SHALL INCLUDE THE INSPECTION OF EROSION CONTROL FACILITIES AFTER EACH STORM EVENT AND ON A WEEKLY BASIS. IMMEDIATELY PERFORM CLEANOUT REPAIR AND REPLACEMENT OF THE FACILITIES AS NEEDED. REGRADE, RESEED AND MULCH WASHED OUT AREAS AS THEY OCCUR.
9. SEEDED AREAS THAT HAVE WASHED AWAY SHALL BE FILLED AND GRADED, AS NECESSARY AND THEN RESEEDED. A STRAW COVER SHALL BE APPLIED TO RETAIN THE SEED. STRAW MULCH SHALL BE PLACED AT A RATE OF 3 TONS PER ACRE. EROSION CONTROL MATTING/FABRIC SHALL BE USED TO STABILIZE AREAS THAT HAVE WASHED AWAY MORE THAN TWICE.
10. THE PERMITTEE SHALL PROVIDE ENGINEERING CONSTRUCTION OVERSIGHT FOR THE PROPOSED STORMWATER BMPS. ADDITIONAL SOIL TESTING MAY BE REQUIRED PRIOR TO THE INSTALLATION OF INFILTRATION BMPS TO ENSURE PROPER LOCATION AND FUNCTION. A LICENSED PROFESSIONAL KNOWLEDGEABLE IN THE DESIGN AND CONSTRUCTION OF STORMWATER BMPS, PREFERABLY THE DESIGN ENGINEER, SHALL CONDUCT THE OVERSIGHT.
11. THE PERMITTEE OR CO–PERMITTEE SHALL BE RESPONSIBLE FOR LONG TERM OPERATION AND MAINTENANCE OF PCSM BMPS UNLESS A DIFFERENT PERSON IS IDENTIFIED IN THE NOTICE OF TERMINATION AND HAS AGREED TO LONG TERM OPERATION AND MAINTENANCE OF PCSM BMPS.
12. FOR ANY PROPERTY CONTAINING A PCSM BMP, THE PERMITTEE OR CO–PERMITTEE SHALL RECORD AN INSTRUMENT WITH THE RECORDER OF DEEDS WHICH WILL ASSURE DISCLOSURE OF THE PCSM BMP AND THE RELATED OBLIGATIONS IN THE ORDINARY COURSE OF A TITLE SEARCH OF THE SUBJECT PROPERTY. THE RECORDED INSTRUMENT MUST IDENTIFY THE PCSM BMP, PROVIDE FOR NECESSARY ACCESS RELATED TO LONG TERM OPERATION AND MAINTENANCE FOR PCSM BMPS AND PROVIDE NOTICE THAT THE RESPONSIBILITY FOR LONG TERM OPERATION AND MAINTENANCE OF THE PCSM BMP IS A COVENANT THAT RUNS WITH THE LAND THAT IS BINDING UPON AND ENFORCEABLE BY SUBSEQUENT GRANTEES, AND PROVIDE PROOF OF FILING WITH THE NOTICE OF TERMINATION UNDER § 102.7(B)(5) (RELATING TO PERMIT TERMINATION).
13. A PERMITTEE OR CO–PERMITTEE THAT FAILS TO TRANSFER LONG TERM OPERATION AND MAINTENANCE OF THE PCSM BMP OR OTHERWISE FAILS TO COMPLY WITH THIS REQUIREMENT SHALL REMAIN JOINTLY AND SEVERALLY RESPONSIBLE WITH THE LANDOWNER FOR LONG TERM OPERATION AND MAINTENANCE OF THE PCSM BMPS LOCATED ON THE PROPERTY.
14. FINAL CERTIFICATION. THE PERMITTEE SHALL INCLUDE WITH THE NOTICE OF TERMINATION "RECORD DRAWINGS" WITH A FINAL CERTIFICATION STATEMENT FROM A LICENSED PROFESSIONAL, WHICH READS AS FOLLOWS:
"I (NAME) DO HEREBY CERTIFY PURSUANT TO THE PENALTIES OF 18 PA.C.S.A. § 4904 TO THE BEST OF MY KNOWLEDGE, INFORMATION AND BELIEF, THAT THE ACCOMPANYING RECORD DRAWINGS ACCURATELY REFLECT THE AS–BUILT CONDITIONS, ARE TRUE AND CORRECT, AND ARE IN CONFORMANCE WITH CHAPTER 102 OF THE RULES AND REGULATIONS OF THE DEPARTMENT OF ENVIRONMENTAL PROTECTION AND THAT THE PROJECT SITE WAS CONSTRUCTED IN ACCORDANCE WITH THE APPROVED PCSM PLAN, ALL APPROVED PLAN CHANGES AND ACCEPTED CONSTRUCTION PRACTICES."
(1) THE PERMITTEE SHALL RETAIN A COPY OF THE RECORD DRAWINGS AS A PART OF THE APPROVED PCSM PLAN.
(2) THE PERMITTEE SHALL PROVIDE A COPY OF THE RECORD DRAWINGS AS A PART OF THE APPROVED PCSM PLAN TO THE PERSON IDENTIFIED IN THIS SECTION AS BEING RESPONSIBLE FOR THE LONG TERM OPERATION AND MAINTENANCE OF THE PCSM BMPS.
15. UPON PERMANENT STABILIZATION OF THE EARTH DISTURBANCE ACTIVITY UNDER § 102.22(A)(2) (RELATING TO PERMANENT STABILIZATION), AND INSTALLATION OF BMPS IN ACCORDANCE WITH AN APPROVED PLAN PREPARED AND IMPLEMENTED IN ACCORDANCE WITH §§ 102.4 AND 102.8 (RELATING TO EROSION AND SEDIMENT CONTROL REQUIREMENTS; AND PCSM REQUIREMENTS), THE PERMITTEE OR CO–PERMITTEE SHALL SUBMIT A NOTICE OF TERMINATION TO THE PENNSYLVANIA DEPARTMENT OF ENVIRONMENTAL PROTECTION OR THE CHESTER COUNTY CONSERVATION DISTRICT, WHICHEVER IS APPLICABLE. THE NOTICE OF TERMINATION MUST INCLUDE:
(1) THE FACILITY NAME, ADDRESS AND LOCATION.
(2) THE OPERATOR NAME AND ADDRESS.
(3) THE PERMIT NUMBER.
(4) THE REASON FOR PERMIT TERMINATION.
(5) IDENTIFICATION OF THE PERSONS WHO HAVE AGREED TO AND WILL BE RESPONSIBLE FOR LONG TERM OPERATION AND MAINTENANCE OF THE PCSM BMPS IN ACCORDANCE WITH § 102.8(M) AND PROOF OF COMPLIANCE WITH § 102.8(M)(2).
UNTIL THE PERMITTEE OR CO–PERMITTEE HAS RECEIVED WRITTEN APPROVAL OF A NOTICE OF TERMINATION, THE PERMITTEE OR CO–PERMITTEE WILL REMAIN RESPONSIBLE FOR COMPLIANCE WITH THE PERMIT TERMS AND CONDITIONS INCLUDING LONG TERM OPERATION AND MAINTENANCE OF ALL PCSM BMPS ON THE PROJECT SITE AND IS RESPONSIBLE FOR VIOLATIONS OCCURRING ON THE PROJECT SITE. PRIOR TO ACCEPTING THE NOT, THE DEPARTMENT AND/OR CONSERVATION DISTRICT STAFF WILL PERFORM A FINAL INSPECTION AND APPROVE OR DENY THE NOTICE OF TERMINATION.

SUITABLE FILL

SUITABLE MATERIAL–CLEAN SOIL CONTAINING NOT MORE THAN 30% SILT/CLAY PARTICLES FINER THAN THE NO. 200 SIEVE (BY WEIGHT), AS DETERMINED BY SOIL LABORATORY TESTING AND METHOD OF ASTM D–2487, WHICH IS CAPABLE OF BEING COMPACTED TO THE REQUIRED DENSITY AT THE PROPER MOISTURE CONTENT, AND WHICH IS FREE OF TOPSOIL, ROOTS, TRASH, DEBRIS, FROZEN MATERIAL, ORGANIC MATTER, EXCESS MOISTURE (WATER CONTENT AT COMPACTION MUST BE WITHIN 2% OF OPTIMUM) AND OTHER DELETERIOUS INCLUSIONS. THE LIMITS OF ROCK AS SUITABLE MATERIAL SHALL NOT EXCEED 4 INCHES (4") IN SIZE. THE REMAINDER OF ROCK SHALL EB CLASSED AS COMPACTION OF FILL TO THE REQUIRED DENSITY. SUITABLE FILL SHALL BE APPROVED BY THE ON–SITE GEOTECHNICAL ENGINEER PRIOR TO PLACEMENT AND COMPACTION.

SOIL TYPE USE LIMITATIONS AND RESOLUTIONS

1. SOIL TYPES POORLY SUITED AS SOURCES OF TOPSOIL RESTRICT OR PLACE CONDITIONS ON PLANNING VEGETATIVE STABILIZATION. ACIDIC, LOW FERTILITY, EXCESSIVE DRYNESS AND EXCESSIVE WETNESS LIMIT PLANT GROWTH.
RESOLUTIONS: IDENTIFYING AND RESOLVING CHARACTERISTICS, THAT RENDER THE SOIL TYPES POORLY, SUITED AS TOPSOIL.
2. ACIDIC SOIL TYPES EXHIBITING PH REACTION VALUES LOWER THAN ABOUT 5.5, LIMIT VEGETATIVE STABILIZATION. SOIL TESTS MIGHT BE NECESSARY TO DETERMINE SITE SPECIFIC PH REACTION.
RESOLUTIONS: APPLYING LIME CONSISTENT WITH RATES DETERMINED BY SOIL TESTING; SELECTING VEGETATIVE SPECIES TOLERANT TO ACIDIC SOIL CONDITIONS; AND IMPLEMENTING COMBINATIONS OF THESE AND/OR OTHER METHODS. SPECIFIC TOLERANCE INFORMATION IS PROVIDED IN TABLE 1 OF THE EROSION CONTROL & CONSERVATION PLANTINGS ON NONCROPLAND PUBLISHED BY PENN STATE.
3. LOW FERTILITY SOIL TYPES LACKING IN SUFFICIENT AMOUNTS OF ESSENTIAL PLANT NUTRIENTS SUCH AS: NITROGEN, PHOSPHOROUS, POTASSIUM, SULFER, MAGNESIUM, CALCIUM, IRON, MANGANESE, BORON, CHLORINE, ZINC, COPPER AND MOLYBDENUM, LIMIT VEGETATION STABILIZATION. SOIL TESTS MIGHT BE NECESSARY TO DETERMINE SITE SPECIFIC SOIL FERTILITY.
RESOLUTIONS: INCORPORATING SOIL NUTRIENTS CONSISTENT WITH RATES DETERMINED BY SOIL TESTING; SELECTIVE VEGETATIVE SPECIES TOLERANT TO LOW FERTILITY SOIL CONDITIONS, AND IMPLEMENTING COMBINATIONS OF THESE AND OR OTHER METHODS. SPECIFIC TOLERANCE INFORMATION IS PROVIDED IN TABLE 1 OF THE EROSION CONTROL & CONSERVATION PLANTINGS ON NONCROPLAND PUBLISHED BY PENN STATE.
4. ERODIBLE SOIL TYPES EXHIBITING K VALUES GREATER THAN 0.36 OR PLASTICITY INDEX VALUES LOWER THAN 10, LIMIT VEGETATIVE STABILIZATION OF CHANNELS.
RESOLUTIONS: TEMPORARY CHANNEL LINING, PROVIDING PERMANENT CHANNEL LINING, DECREASING CHANNEL GRADE, INCREASING CHANNEL WIDTH, SELECTING VEGETATIVE WITH GREATER RETARDANCE, SELECTING PERMANENT LININGS OTHER THAN GRASSES, AND IMPLEMENTING COMBINATION OF THESE AND/OR METHODS. VEGETATIVE RETARDANCE INFORMATION IS PROVIDED IN TABLES 6 AND 7 OF THE EROSION AND SEDIMENT POLLUTION CONTROL MANUAL PUBLISHED BY PADEP.
5. WET SOIL TYPES HAVE EXCESSIVE ROOT ZONE AND SOIL MOISTURES. SOME SOIL SURVEYS INDICATE WETNESS, HIGH WATER TABLE AND FLOODING. THIS INDICATOR IS AFFECTED BY SOIL DISTURBANCE.
RESOLUTIONS: SELECTING VEGETATIVE SPECIES TOLERANT TO WET CONDITIONS, TILING VEGETATIVE AREAS, AND IMPLEMENTING COMBINATIONS OF THESE AND/OR OTHER METHODS. SPECIFIC TOLERANCE INFORMATION IS PROVIDED IN TABLE 1 OF THE EROSION CONTROL & CONSERVATION PLANTINGS ON NONCROPLAND PUBLISHED BY PENN STATE.
6. DRY SOIL TYPES LACK SUFFICIENT ROOT ZONE SOIL MOISTURES. THIS INDICATOR IS AFFECTED BY SOIL DISTURBANCE.
RESOLUTIONS: SELECTING VEGETATIVE SPECIES TOLERANT TO DRY CONDITIONS, IRRIGATING VEGETATED AREAS AND IMPLEMENTING COMBINATION OF THESE AND/OR OTHER METHODS. SPECIFIC TOLERANCE INFORMATION IS PROVIDED IN TABLE 1 OF THE EROSION CONTROL & CONSERVATION PLANTINGS ON NONCROPLAND PUBLISHED BY PENN STATE.
7. SOIL TYPES SUSCEPTIBLE TO SINKHOLE AND SOLUTION CHANNEL/CHAMBER FORMATION POSE LIMITATIONS ON LOCATING RESERVOIR AREAS OF SEDIMENT BASINS, SEDIMENT TRAPS, STORMWATER RETENTION BASINS, AND STORMWATER DETENTION BASINS.
RESOLUTIONS: LOCATING THOSE FACILITIES ON OTHER SOIL TYPES, LINING RESERVOIR AREAS WITH IMPERMEABLE LININGS, LIMITING STANDING WATER DEPTHS, LIMITING RETENTION TIMES AND IMPLEMENTING COMBINATIONS OF THESE AND/OR OTHER METHODS.
8. SOIL TYPES THAT EXHIBIT INSTABILITY IN POND EMBANKMENTS OR SUSCEPTIBILITY TO PIPING AND SEEPING POSE LIMITATIONS ON PLANNING EMBANKMENTS OF SEDIMENT BASINS, SEDIMENT TRAPS, STORMWATER RETENTION BASINS AND STORMWATER DETENTION BASINS.
RESOLUTIONS: IMPORTING OTHER SOIL FOR EMBANKMENT OF THOSE FACILITIES, LOCATING THOSE FACILITIES ON OTHER SOIL TYPES, LIMITING EMBANKMENT SLOPE STEEPNESS AND IMPLEMENTING COMBINATIONS OF THESE AND/OR OTHER METHODS.
9. SOILS THAT ARE DIFFICULT TO COMPACT, UNSUITABLE FOR WINTER GRADING, OR SUSCEPTIBLE TO FROST ACTION POSE LIMITATIONS ON PLANNING EMBANKMENTS OF SEDIMENT BASINS, SEDIMENT TRAPS, STORM WATER RETENTION BASINS AND STORMWATER DETENTION BASINS.
RESOLUTIONS: IMPORTING OTHER SOIL FOR EMBANKMENT OF THOSE FACILITIES, LOCATING THOSE FACILITIES ON OTHER SOILS TYPES, NOT CONSTRUCTING EMBANKMENTS DURING PERIODS PRONE TO FROST AND IMPLEMENTING COMBINATIONS OF THESE AND/OR OTHER METHODS.

PROTECTIVE FENCING SHALL BE INSTALLED AROUND ALL INFILTRATION FACILITIES TO PROTECT INFILTRATION FACILITIES FROM CONSTRUCTION ACTIVITIES THAT COULD RESULT IN SOIL COMPACTION.

THE PCSWM PLAN, INSPECTION REPORTS, AND MONITORING RECORDS SHALL BE AVAILABLE FOR REVIEW AND INSPECTION BY THE DEPARTMENT OR CONSERVATION DISTRICT.

GEOLOGIC CONDITIONS NOTE:

NO KNOWN GEOLOGIC/SOIL CONDITIONS EXIST ON SITE.

ROOF DOWNSPOUTS AND ROOF LEADER SYSTEM NOTE:

DESIGN OF THE ROOF LEADER SYSTEMS SHOWN ON THIS PLAN, IS SCHEMATIC. SPECIFIC LOCATION OF ROOF DOWNSPOUTS IS APPROXIMATE AND SUBJECT TO CHANGE BASED ON FINAL ARCHITECTURAL DESIGN, UNFORESEEN UTILITY CONFLICTS OR CONFLICTING SITE FEATURES. STORMWATER RUNOFF FROM DWELLING ROOF AREAS MUST BE CONVEYED TO THE INFILTRATION BASINS (EXCEPT WHERE SPECIFICALLY IDENTIFIED OTHERWISE) BY WAY OF THE 8 INCH DIAMETER ROOF LEADER PIPE SYSTEM (THE HORIZONTAL PIPE SYSTEM THAT COLLECTS THE VERTICAL ROOF DISCHARGE PIPES), WHICH IS MUST CONVEY THE 100–YEAR FREQUENCY DESIGN STORM, AT MINIMUM SLOPE OF 0.50% (PIPE SLOPE MAY BE GREATER THAN 0.50%). ROOF LEADERS SYSTEM MUST CONFORM TO THE MINIMUM SIZES, DEPTHS AND CONSTRUCTION SPECIFICATIONS SHOWN ON THIS PLAN.

INFILTRATION BASIN CONSTRUCTION NOTE:

THE BOTTOM OF ALL INFILTRATION BASINS SHALL BE SCARIFIED PRIOR TO PLACEMENT OF GEOTEXTILE FABRIC AND AGGREGATE.

SOILS LEGEND AND TABLE OF LIMITATIONS & RESOLUTIONS BASED ON U.S.D.A. – N.R.C.S. SOILS SURVEY OF CHESTER COUNTY (CURRENT VERSION)

SYMBOL	MAPPING UNITS	SLOPE	LAND CAPABILITY	HYDRIC SOIL	HYDROLOGIC GROUP	DEPTH TO BEDROCK	DEPTH TO WATER TABLE	DWELLINGS WITH BASEMENTS	RISK OF FROST ACTION	RISK OF EROSION BY WATER (K FACTOR[1])	RISK OF CORROSION STEEL	RISK OF CORROSION CONCRETE	DWELLINGS WITHOUT BASEMENTS	LOCAL ROADS AND STREETS	SHALLOW EXCAVATIONS	EMBANKMENTS	LAWNS & LANDSCAPING	ROAD FILL SOURCE	TOPSOIL SOURCE
GgB	GLENELG SILT LOAM	3–8%	2E	NO	B	> 80 in.	> 80 in.	NOT LIMITED	MODERATE	0.37	LOW	MODERATE	NOT LIMITED	VERY LIMITED 3,4	SOMEWHAT LIMITED	SOMEWHAT LIMITED	SOMEWHAT LIMITED	POOR 3	FAIR 9
MaB	MANOR LOAM	3–8%	2E	NO	B	72–99 in.	> 80 in.	NOT LIMITED	MODERATE	0.28	MODERATE	HIGH	NOT LIMITED	VERY LIMITED 3,4	SOMEWHAT LIMITED	VERY LIMITED	SOMEWHAT LIMITED	POOR 3	POOR 10
MaC	MANOR LOAM	8–15%	3E	NO	B	59–100 in.	> 80 in.	SOMEWHAT LIMITED	MODERATE	0.28	MODERATE	HIGH	SOMEWHAT LIMITED	SOMEWHAT LIMITED 3,4	SOMEWHAT LIMITED	VERY LIMITED	SOMEWHAT LIMITED	POOR 3	FAIR 9,10

(LIMITATIONS FOR SITE DEVELOPMENT)

REASONS FOR LIMITATIONS: 1 – SHRINK–SWELL 2 – SLOPE 3 – LOW STRENGTH 4 – FROST ACTION 5 – CUTBANKS CAVE 6 – PIPING 7 – GRAVEL CONTENT 8 – LARGE STONES CONTENT 9 – ROCK FRAGMENTS 10 – HARD TO RECLAIM (ROCK FRAGMENTS) 11 – DEPTH TO SATURATED ZONE

FOOTNOTES:
1. K FACTOR – ≤0.37=EROSION RESISTANT; >0.37=EASILY ERODED. CLASSIFICATIONS IDENTIFIED IN DEP E&SPC MANUAL, MARCH 2012.

NOTE: ROOF TOP DISCONNECT CREDIT WAS TAKEN FOR LOTS 1, 4, 8, 9, 10, 11, 12, 13, 14 AND PARTIAL ROOF TOP DISCONNECT CREDIT FOR LOTS 6. STORMWATER ROOF RUNOFF FOR LOTS 3, 5 AND 7 MUST BE CONVEYED VIA A ROOF LEADER COLLECTION SYSTEM TO THE UNDERGROUND INFILTRATION BASIN ON THEIR INDIVIDUAL LOTS. THE ROOF LEADER SYSTEM SHOWN IS SCHEMATIC. REFER TO ROOF LEADER SYSTEM DETAIL FOR CONSTRUCTION SPECIFICATIONS. ALL ROOF RUNOFF HAS BEEN ACCOUNTED FOR AND WILL BE DIRECTED TO EITHER INDIVIDUAL ON LOT BEDS OR THE MAIN BED.

NOTE: AN INDIVIDUAL LOT GRADING PLOT PLAN MUST BE SUBMITTED TO THE TOWNSHIP FOR EACH LOT AND MUST INCLUDE GRADING, STORMWATER MANAGEMENT FACILITIES, ROOF LEADER SYSTEM, STORM SEWER, ON–LOT SEEPAGE BASIN, LOT–SPECIFIC DWELLING FOOTPRINT, FIRST FLOOR, BASEMENT FLOOR, GARAGE FLOOR ELEVATIONS, BUILDING SETBACKS, EROSION CONTROL DESIGN AND LOT SPECIFIC IMPERVIOUS SURFACE TABULATION. SUCH PLOT PLANS MUST BE APPROVED BY THE TOWNSHIP PRIOR TO COMMENCEMENT OF CONSTRUCTION OF EACH DWELLING AND LOT IMPROVEMENTS.

INFILTRATION TESTING:

INFILTRATION TESTING WAS PERFORMED IN JUNE 2014 BY ENVIRONMENTAL MANAGEMENT CONSULTING, INC, 3706 COREY LANE, THORNDALE, AP 19372, 484–888–6923.

	TESTING RESULTS: (FS=2.0)	TESTING DEPTH	TOP OF BED	BOTTOM BED ELEV	TESTING ELEVATION
LOT 1	4.5 IN/HR	6.5'	573.5	569.5	569.5
LOT 3	3.5 IN/HR	6.5'	577.0	572.5	572.5
LOT 4/5	3.5 IN/HR	5.0'	571.0	566.0	566.0
LOT 6/7	10.1 IN/HR	6.5'	572.5	568.0	568.0
LOT 8/9/10	12.5 IN/HR	5.0'	580.5	576.0	576.0
LOT 11	11.6 IN/HR	5.5'	582.0	578.5	578.5
MAIN BED	1.1 IN/HR	6.0'	572.0	567.5	567.0

NOTE: A 2.0 FACTOR OF SAFETY WAS USED FOR THE INFILTRATION RATE DESIGN OF ALL BMP'S. RATES SHOWN HAVE A FACTOR OF SAFETY OF 2.0 APPLIED. ACTUAL RATES ARE 2 TIMES THE RATES SHOWN.

PCSWM PLANNING & DESIGN 102.8(b)

1. THE PCSWM PLANS WERE DESIGNED BY A LICENSED, PROFESSIONAL ENGINEER WITH SIGNIFICANT PCSWM DESIGN EXPERIENCE WITH PROJECTS OF THIS NATURE.
2. THE PCSWM PLANS HAVE BEEN DESIGNED TO PREVENT AN INCREASE IN THE RATE OF STORMWATER RUNOFF.
3. THE PCSWM PLANS HAVE BEEN DESIGNED TO MINIMIZE ANY INCREASE IN STORMWATER RUNOFF VOLUME.
4. THE PCSWM PLANS HAVE BEEN DESIGNED TO MINIMIZE IMPERVIOUS AREAS.
5. THE PCSWM PLANS HAVE BEEN DESIGNED TO MAXIMIZE THE PROTECTION OF EXISTING DRAINAGE FEATURES AND EXISTING VEGETATION.
6. THE PCSWM PLANS HAVE BEEN DESIGNED TO MINIMIZE LAND CLEARING AND GRADING.
7. THE PCSWM PLANS HAVE BEEN DESIGNED TO MINIMIZE SOIL COMPACTION.
8. THE PCSWM PLANS HAVE BEEN DESIGNED TO UTILIZE OTHER STRUCTURAL OR NONSTRUCTURAL BMP'S THAT PREVENT OF MINIMIZE CHANGES IN STORMWATER RUNOFF.

WATERSHED NOTE:

THIS PROJECT IS LOCATED IN THE RIDLEY AND VALLEY CREEK WATERSHEDS, WHICH ARE CLASSIFIED AS HQ AND EV STREAMS BY PA CHAPTER 93. THE EXISTING USE IS CLASSIFIED AS HQ AND EV. EXTREME CARE SHOULD BE EXERCISED IN ALL DISTURBANCE ACTIVITIES TO PREVENT DEGRADATION TO THESE CREEKS. ALL DISTURBED AREA ON WHICH WORK HAS BEEN OR WILL BE STOPPED MUST BE PROMPTLY STABILIZED WITH APPROPRIATE TEMPORARY OR PERMANENT STABILIZATION MEASURES.

THE GOAL OF THE PCSM PLAN IS TO PRESERVE THE INTEGRITY OF STREAM CHANNELS AND MAINTAIN AND PROTECT THE PHYSICAL, BIOLOGICAL AND CHEMICAL QUALITIES OF THE RECEIVING STREAMS. THE FOLLOWING IS SOURCE AND CAUSE OF IMPAIRMENT ACCORDING TO CATEGORIES 4 AND 5 PA INTEGRATED WATER QUALITY MONITORING AND ASSESSMENT REPORT:

RIDLEY CREEK [APP. E, SILTATION (5), CAUSE UNKNOWN (5), WATER VARIABILITY (4C)]

VALLEY CREEK [APP.C, PCB (4A), APP. B, PATHOGENS, APP. E, SILTATION (5), CAUSE UNKNOWN (5), OTHER HABITAT ALTERATIONS, WATER/FLOW VARIABILITY (4C)].

STORM SEWER INLET NOTE:

ALL STORM INLETS SHOWN WITH THIS SYMBOL ARE TO BE CONSTRUCTED USING PENNDOT TYPE 4 (4'X4') CONCRETE INLET BOXES FITTED WITH "SNOUT" MODEL 24F or 30F. REFER TO SNOUT DETAIL AND DESIGN TABLE (ON SHEET 4 OF 17) FOR CONSTRUCTION SPECIFICATIONS AND BOTTOM OF INLET BOX ELEVATIONS.

SOILS/SEEDING

ERNMX–180 SEED MIX	(shaded)
AMMENDED SOILS	(stippled)

INFILTRATION BASIN CONSTRUCTION NOTE:

THE BOTTOM OF ALL INFILTRATION BASINS SHALL BE SCARIFIED PRIOR TO PLACEMENT OF GEOTEXTILE FABRIC AND AGGREGATE.

On Lot Impervious Cover Chart

ON LOT BEDS	House and Driveway	Miscellaneous	Total Impervious Cover
Lot 1	5,900	750	6,650
Lot 3	3,780	750	4,530
Lot 4	4,205	750	4,955
Lot 5	4,160	750	4,910
Lot 6	3,505	750	4,255
Lot 7	5,280	750	6,030
Lot 8	3,495	750	4,245
Lot 9	3,895	750	4,645
Lot 10	3,675	750	4,425
Lot 11	3,660	750	4,410
Lot 12	3,720	750	4,470
Lot 13	3,718	750	4,468
Lot 14	3,360	750	4,110

Lot #2 is an existing lot proposed to remain. No improvements are proposed for existing Lot 2. Pool water surface is considered impervious surface. Wood deck (with no impervious surface below) is considered a pervious surface.

PAST, PRESENT AND FUTURE USE NOTE:

THE PAST (WITHIN THE LAST 50 YEARS) AND PRESENT LAND USE (WITH LAST 5 YEARS) IS MOSTLY WOODED WITH TWO SINGLE FAMILY DWELLINGS EXISTING ON SITE. THE FUTURE USE (WITHIN THE NEXT 5 YEARS) IS TO DEMOLISH ONE OF THE TWO SINGLE FAMILY RESIDENCE AND CONSTRUCT 13 NEW SINGLE FAMILY HOMES ON A PROPOSED CUL–DE–SAC STREET.

APPLICANT/EQUITABLE OWNER:

WOODSTONE DEVELOPMENT COMPANY, LP
70 POTTSTOWN PIKE, SUITE 100
CHESTER SPRINGS, PA 19425

SITE ADDRESS:

110 SPROUL ROAD
MALVERN, PA 19355

LEGEND

EXISTING	DESCRIPTION	PROPOSED
	STORMWATER FACILITY DRAINAGE AREA BOUNDARY	
	STORMWATER FACILITY DRAINAGE AREA IDENTIFICATION	
	NPDES / LIMIT OF DISTURBANCE BOUNDARY	LOD
580	5 & 10' CONTOUR	580
578	1' CONTOUR	578
	SOIL BOUNDARY	
MaC	SOIL IDENTIFICATION	
	INFILTRATION TEST / TEST PIT LOCATION	SW10
	STORM SEWER	
	STORM INLET	
D	STORM MANHOLE	D
	ROOF DRAIN	

GRAPHIC SCALE
40 0 20 40 80 160
(IN FEET)
1 inch = 40 ft.

PROJECT SERIAL No. : 20182490802
BEFORE YOU DIG ANYWHERE IN... PENNSYLVANIA
PENNSYLVANIA ONE CALL SYSTEM, INC. 1–800–242–1776 STOP–CALL BEFORE YOU DIG
STOP! CALL 1–800–242–1776 (TOLL FREE)
PA LAW REQUIRES 3 WORKING DAYS NOTICE FOR CONSTRUCTION PHASE AND 10 WORKING DAYS NOTICE IN DESIGN STAGE PENNSYLVANIA ONE CALL SYSTEM, Inc.
ALL TRENCHING, SHEETING AND SHORING SHALL BE IN STRICT ACCORDANCE WITH OSHA STANDARDS.

ACT NUMBER 287 OF 1974 as AMENDED UTILITY USER LIST

AQUA PENNSYLVANIA, INC. 700 W. SPROUL ROAD SPRINGFIELD, PA 19064 CONTACT: JOSEPH M. CILIBERTI PHONE: (484) 470–1075	*PECO ENERGY* 3628 HORIZON DRIVE, DELONFILE KING OF PRUSSIA, PA 19406 CONTACT: SUSAN TERREY PHONE: (215) 956–3182
COMCAST CABLE COMM., INC. 110 SPRINGBROOKE BLVD. ASTON, PA 19014 CONTACT: DAN CLARK PHONE: (877) 537–8411	*VALLEY FORGE SEWER AUTHORITY* 333 PAWLING ROAD PHOENIXVILLE, PA 19460 CONTACT: STEPHEN YUHAS PHONE: (610) 983–9684
EAST WHITELAND TOWNSHIP 209 CONESTOGA ROAD MALVERN, PA 19355 CONTACT: TERRY H. WOODMAN PHONE: (610) 648–0600	*VERIZON PENNSYLVANIA, INC.* 900 RACE STREET, 6TH FLOOR PHILADELPHIA, PA 19107 CONTACT: JOSEPH SCELSA PHONE: (610) 280–5586

CLEAN FILL DEFINITION

TAKEN FROM "INS1RUCTIONS FOR A GENERAL (PAG–2) OR INDIVIDUAL NPDES PERMIT FOR STORMWATER DISCHARGES ASSOCIATED WITH CONSTRUCTION ACTIVITIES", PREPARED BY THE PENNSYLVANIA DEPARTMENT OF ENVIRONMENTAL PROTECTION, DATED MAY 2007.

"UNCONTAMINATED, NON–WATER SOLUBLE, NON–COMPOSABLE, INERT, SOLID MATERIAL. THE TERM INCLUDES SOIL, ROCK, STONE, DREDGED MATERIAL, USED ASPHALT, AND BRICK, BLOCK OR CONCRETE FROM CONSTRUCTION AND DEMOLITION ACTIVITIES THAT IS SEPARATE FROM OTHER WASTE AND IS RECOGNIZABLE AS SUCH. THE TERM DOES NOT INCLUDE MATERIALS PLACED IN OR ON THE WATERS OF THE COMMONWEALTH UNLESS OTHERWISE AUTHORIZED. (THE TERM 'USED ASPHALT' DOES NOT INCLUDE MILLED ASPHALT OR ASPHALT THAT HAS BEEN PROCESSED FOR RE–USE.)"

CLEAN FILL AFFECTED BY A SPILL OR RELEASE OF A REGULATED SUBSTANCE: FILL MATERIALS AFFECTED BY A SPILL OR RELEASE OF A REGULATED SUBSTANCE STILL QUALIFIES AS CLEAN FILL PROVIDED THE TESTING REVEALS THAT THE FILL MATERIAL CONTAINS CONCENTRATIONS OF REGULATED SUBSTANCES THAT ARE BELOW THE RESIDENTIAL LIMITS IN TABLES FP–1A AND FP–1B FOUND IN THE DEPARTMENT'S POLICY "MANAGEMENT OF FILL".

ANY PERSON PLACING CLEAN FILL THAT HAS BEEN AFFECTED BY A SPILL OR RELEASE OF A REGULATED SUBSTANCE MUST USE FORM FP–001 TO CERTIFY THE ORIGIN OF THE FILL MATERIAL AND THE RESULTS OF THE ANALYTICAL TESTING TO QUALIFY THE MATERIAL AS CLEAN FILL. FORM FP–001 MUST BE RETAINED BY THE OWNER OF THE PROPERTY RECEIVING THE FILL. A COPY OF FORM FP–001 CAN BE FOUND AT THE END OF THESE INSTRUCTIONS.

ORIGINAL PLANS BEAR A REGISTRATION SEAL IN RED INK.
COMMONWEALTH OF PENNSYLVANIA REGISTERED PROFESSIONAL ERIC J. JANETKA ENGINEER No. 050549–E

KELLY & CLOSE ENGINEERS
CONSULTING ENGINEERS & SURVEYORS
The Summit at Brandywine
1786 Wilmington Pike/Suite 300
Glen Mills, Pennsylvania 19342
610.358.9363 fax 610.358.9376

REV.	DATE	DESCRIPTION	BY
3	2/8/2019	REVISE PLAN PER TOWNSHIP CONSULTANT REVIEWS, NPDES PERMIT REVIEW	E.J.J.
2	10/5/2018	REVISED GRADING; REVISED SANITARY SEWER DESIGN; REVISED SWM	E.J.J.
1	9/10/2014	REVISED PER TWP 8–11–14 AND 8–18–14 REVIEW LETTERS	E.J.J.

date:	7/21/2014
scale:	1" = 40'
drawn by:	M.J.B.
checked by:	E.J.J.
dwg. name:	F–PCSM.dwg
project no.:	N/A

SHIRTZ FARM
110 SPROUL ROAD
EAST WHITELAND TOWNSHIP
CHESTER COUNTY, PENNSYLVANIA

NPDES PERMIT
RECORDING PLAN SHEET 2 OF 6

POST–CONSTRUCTION STORMWATER MANAGEMENT PLAN

This document and all information and work product represented by and contained herein, is the sole and exclusive property of James C. Kelly & Associates, Inc., t/a Kelly & Close Engineers. The information contained herein is licensed only for limited use by the intended recipient, and no license, permission or authority is extended, directly or implied, to any party without express written permission of James C. Kelly & Associates, Inc.
Copyright, 2015, James C. Kelly & Associates, Inc. All rights reserved

SHEET 10 of 24

SHEET 0.0 – COVER SHEET

StormTrap®
MODULAR CONCRETE STORMWATER MANAGEMENT

THESE DRAWINGS ARE FOR YOUR REFERENCE ONLY AND SHALL NOT BE USED FOR CONSTRUCTION PURPOSES. THE STORMTRAP DRAWINGS SHALL NOT BE ALTERED OR MANIPULATED IN WHOLE OR IN PART WITHOUT WRITTEN CONSENT OF STORMTRAP. USE OF THESE DRAWINGS IS STRICTLY GRANTED TO YOU, OUR CLIENT, FOR THE SPECIFIED AND NAMED PROJECT ONLY.

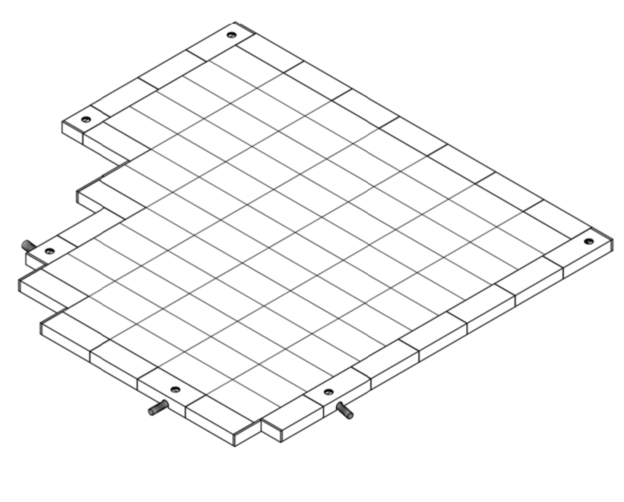

SHIRTZ FARM SUBDIVISION V3
MALVERN, PA

SHEET INDEX

PAGE	DESCRIPTION
0.0	COVER SHEET
1.0	SINGLETRAP DESIGN CRITERIA
2.0	SINGLETRAP SYSTEM LAYOUT
3.0	SINGLETRAP INSTALLATION SPECIFICATIONS
3.1	SINGLETRAP INSTALLATION SPECIFICATIONS
4.0	SINGLETRAP BACKFILL SPECIFICATIONS
5.0	RECOMMENDED PIPE/ACCESS OPENING SPECIFICATIONS
6.0	SPLASH PAD & GEOWEB DETAILS
7.0	SINGLETRAP MODULE TYPES
8.0	OUTLET CONTROL STRUCTURE DETAIL

STORMTRAP CONTACT INFORMATION

STORM TRAP SUPPLIER: STORMTRAP
CONTACT NAME: SEAN AGANS
CELL PHONE: 646-242-9956
SALES EMAIL: SAGANS@STORMTRAP.COM

StormTrap® — PATENTS LISTED AT: [HTTP://STORMTRAP.COM/PATENT]
1287 WINDHAM PARKWAY, ROMEOVILLE, IL 60446, P:815-941-4549 / F:331-318-5347

ENGINEER INFORMATION: KELLY & CLOSE ENGINEERS, 1786 WILMINGTON PIKE, SUITE 300, GLEN MILLS, PA, 610-358-9363
PROJECT INFORMATION: SHIRTZ FARM SUBDIVISION, MALVERN, PA
CURRENT ISSUE DATE: 2/12/2019
ISSUED FOR: PRELIMINARY

REV.	DATE:	ISSUED FOR:	DWN BY:
3	2/12/2019	PRELIMINARY	JW
2	9/7/2018	PRELIMINARY	JW
1	8/31/2018	PRELIMINARY	JW

SCALE: NTS
SHEET TITLE: COVER SHEET
SHEET NUMBER: 0.0

SHEET 1.0 – SINGLETRAP DESIGN CRITERIA

STRUCTURAL DESIGN LOADING CRITERIA

LIVE LOADING: AASHTO HS-20 HIGHWAY LOADING
GROUND WATER TABLE: BELOW INVERT OF SYSTEM
SOIL BEARING PRESSURE: 4000 PSF
SOIL DENSITY: 120 PCF
EQUIVALENT UNSATURATED LATERAL ACTIVE EARTH PRESSURE: 35 PSF / FT.
EQUIVALENT SATURATED LATERAL ACTIVE EARTH PRESSURE: 80 PSF/FT. (IF WATER TABLE PRESENT)
APPLICABLE CODES: AASHTO, ACI-318
BACKFILL TYPE: SEE SHEET 4.0 FOR BACKFILL OPTIONS

STORMTRAP SYSTEM INFORMATION

WATER STORAGE PROV (@ ELEV 571.28): 24,084.70 CUBIC FEET
WATER STORAGE PROV (IN 18" STONE BASE & 2' STONE BACKFILL): 8,636.06 CUBIC FEET
TOTAL WATER STORAGE PROV: 32,720.76 CUBIC FEET
UNIT HEADROOM: 2' - 7" SINGLETRAP
UNIT QUANTITY: 98 TOTAL PIECES

SITE SPECIFIC DESIGN CRITERIA

1. STORMTRAP UNITS SHALL BE MANUFACTURED AND INSTALLED ACCORDING TO SHOP DRAWINGS APPROVED BY THE INSTALLING CONTRACTOR AND ENGINEER OF RECORD. THE SHOP DRAWINGS SHALL INDICATE SIZE AND LOCATION OF ROOF OPENINGS AND INLET/ OUTLET PIPE TYPES, SIZES, INVERT ELEVATIONS AND SIZE OF OPENINGS.
2. COVER RANGE: MIN. 1.42' MAX. 5.32' CONSULT STORMTRAP FOR ADDITIONAL COVER OPTIONS.
3. ALL DIMENSIONS AND SOIL CONDITIONS, INCLUDING BUT NOT LIMITED TO GROUNDWATER AND SOIL BEARING CAPACITY ARE REQUIRED TO BE VERIFIED IN THE FIELD BY OTHERS PRIOR TO STORMTRAP INSTALLATION.
4. FOR STRUCTURAL CALCULATIONS THE GROUND WATER TABLE IS ASSUMED TO BE BELOW INVERT OF SYSTEM. IF WATER TABLE IS DIFFERENT THAN ASSUMED, CONTACT STORMTRAP.

INFILTRATION BASIN CONSTRUCTION NOTE:
THE BOTTOM OF ALL INFILTRATION BASINS SHALL BE SCARIFIED PRIOR TO PLACEMENT OF GEOTEXTILE FABRIC AND AGGREGATE.

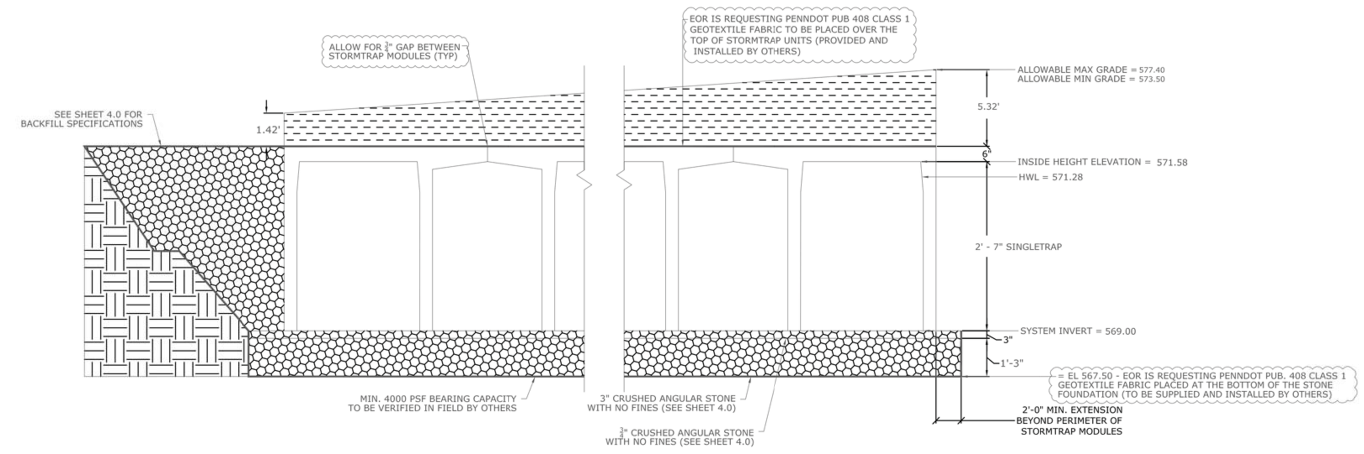

2' - 7" SINGLETRAP

SHEET TITLE: SINGLETRAP DESIGN CRITERIA
SHEET NUMBER: 1.0

SHEET 2.0 – SINGLETRAP LAYOUT DETAILS

BILL OF MATERIALS

QTY.	UNIT TYPE	DESCRIPTION	WEIGHT
0	I	2' - 7" SINGLETRAP	14766
71	II	2' - 7" SINGLETRAP	14766
0	III	2' - 7" SINGLETRAP	12728
24	IV	2' - 7" SINGLETRAP	12728
0	VII	2' - 7" SINGLETRAP	10691
3	SPIV	2' - 7" SINGLETRAP	VARIES
10	PANEL	6" THICK PANELS	VARIES
18	JOINT WRAP	150' PER ROLL	
0	JOINT TAPE	14.5' PER ROLL	

LOADING DISCLAIMER:

STORMTRAP IS NOT DESIGNED TO ACCEPT ANY ADDITIONAL LOADINGS FROM NEARBY STRUCTURES NEXT TO OR OVER THE TOP OF STORMTRAP. IF ADDITIONAL LOADING CONSIDERATIONS ARE REQUIRED FOR STRUCTURAL DESIGN OF STORMTRAP, PLEASE CONTACT STORMTRAP IMMEDIATELY.

NOTE:
CONTRACTOR/BUILDER SHALL PROVIDE ALL SEALANT AND MANHOLE RISERS, FRAMES AND COVERS SHOWN ON THE STORMTRAP DRAWINGS. ALL MANHOLE COVERS SHALL BE CAST WITH THE WORD "STORM SEWER" IN 2" TALL LETTERS.

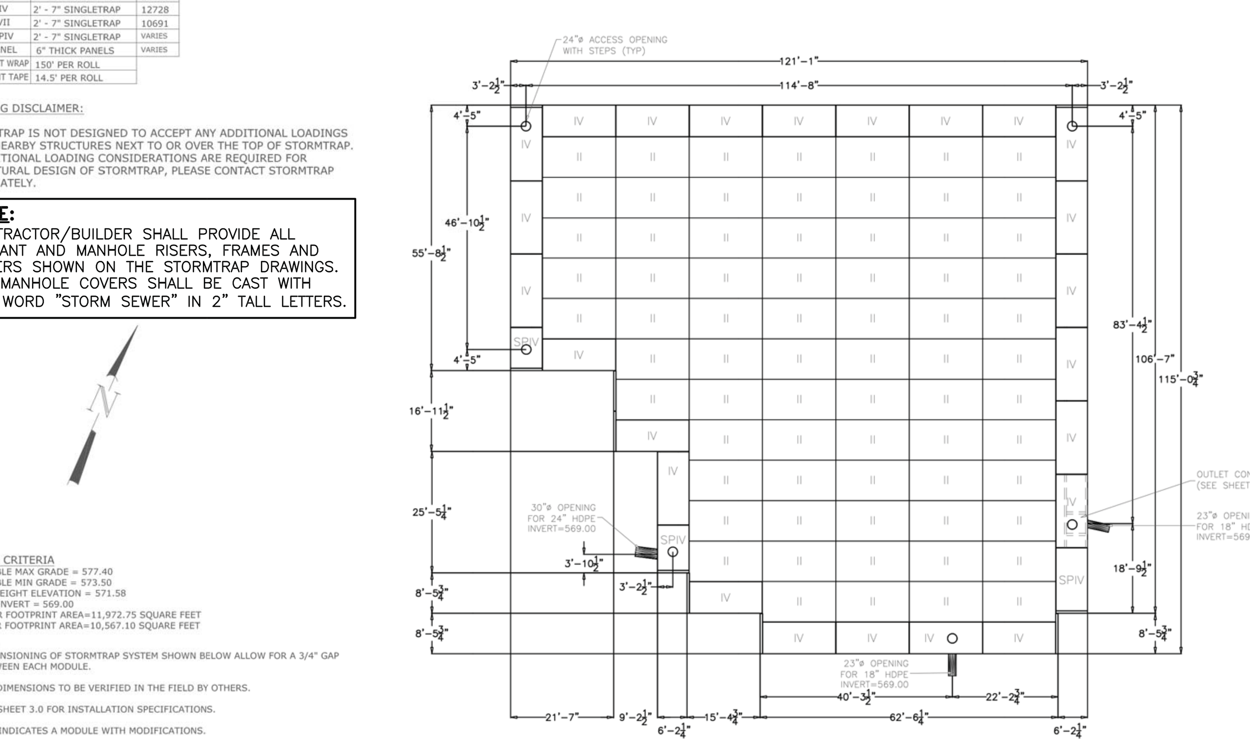

DESIGN CRITERIA
ALLOWABLE MAX GRADE = 577.40
ALLOWABLE MIN GRADE = 573.50
INSIDE HEIGHT ELEVATION = 571.58
SYSTEM INVERT = 569.00
EXTERIOR FOOTPRINT AREA=11,972.75 SQUARE FEET
INTERIOR FOOTPRINT AREA=10,567.10 SQUARE FEET

NOTES:
1. DIMENSIONING OF STORMTRAP SYSTEM SHOWN BELOW ALLOW FOR A 3/4" GAP BETWEEN EACH MODULE.
2. ALL DIMENSIONS TO BE VERIFIED IN THE FIELD BY OTHERS.
3. SEE SHEET 3.0 FOR INSTALLATION SPECIFICATIONS.
4. SP - INDICATES A MODULE WITH MODIFICATIONS.
5. P - INDICATES A MODULE WITH A PANEL ATTACHMENT.
6. CONTRACTORS RESPONSIBILITY TO ENSURE CONSISTENCY/ACCURACY TO FINAL ENGINEER OF RECORD PLAN SET.
7. IF A WATERTIGHT SOLUTION IS REQUIRED FOR THIS OUTLET CONTROL STRUCTURE, STORMTRAP RECOMMENDS THE USE OF XYPEX OR SIKAFLEX MATERIALS (OR APPROVED EQUIVALENT). WATERPROOFING MATERIALS TO BE SUPPLIED AND INSTALLED BY THE INSTALLING CONTRACTOR. CONTACT STORMTRAP FOR A LIST OF APPROVED APPLICATORS.

SHEET TITLE: SINGLETRAP LAYOUT DETAILS
SHEET NUMBER: 2.0

SHEET 3.0 – SINGLETRAP INSTALLATION SPECIFICATIONS

STORMTRAP INSTALLATION SPECIFICATIONS

1. STORMTRAP SHALL BE INSTALLED IN ACCORDANCE WITH ASTM C891 STANDARD PRACTICE FOR INSTALLATION OF UNDERGROUND PRE-CAST CONCRETE UTILITY STRUCTURES. THE FOLLOWING ADDITIONS AND/OR EXCEPTIONS SHALL APPLY:
2. IT IS THE RESPONSIBILITY OF THE INSTALLING CONTRACTOR TO ENSURE THAT PROPER/ADEQUATE EQUIPMENT IS USED TO SET/INSTALL THE MODULES.
3. THE AGGREGATE FOUNDATION HAS BEEN DESIGNED BASED ON THE FOLLOWING ASSUMPTIONS. THESE ASSUMPTIONS WILL NEED TO BE VERIFIED BY A GEOTECHNICAL ENGINEER WHICH WILL NEED TO BE EMPLOYED BY THE OWNER.
   - 3.1. A QUALIFIED GEOTECHNICAL ENGINEER WILL BE EMPLOYED, BY OWNER, TO PROVIDE ASSISTANCE IN EVALUATING THE EXISTING SOIL CONDITIONS BELOW THE PROPOSED ENGINEERED STONE FOUNDATION. IF A STONE FOUNDATION DESIGN IS TO BE USED, THE BEARING PRESSURE OF THE SOILS BELOW THE STONE WILL NEED TO MEET OR EXCEED ALLOWABLE CAPACITY. IF THIS IS NOT POSSIBLE, THE STONE FOUNDATION MAY NOT BE AN OPTION FOR THIS LOCATION.
   - 3.2. A QUALIFIED GEOTECHNICAL ENGINEER WILL BE EMPLOYED, BY OWNER, TO EVALUATE A SOURCE OF STONE AGGREGATES THAT WILL BE PLACED ON PROPERLY COMPACTED SOILS (SEE SHEET 1.0 FOR SOIL BEARING CAPACITY REQUIREMENTS). THE AGGREGATE BASE COURSE FOR WHICH THE STORMTRAP SYSTEM WILL BEAR DIRECTLY ON SHALL CONSIST OF A 3" THICK BED OF ¾" DIAMETER ANGULAR STONE, WELL COMPACTED AND SEATED, WITH NO FINES. AND A 15" THICK BED OF 3" DIAMETER STONE AGGREGATE (SEE SHEET 4.0 FOR FURTHER DESCRIPTION/EXPLANATION). PLEASE NOTE THAT THESE ARE ONLY MINIMUM RECOMMENDATIONS AND A QUALIFIED GEOTECHNICAL ENGINEER SHALL BE USED TO DETERMINE THE EXACT REQUIREMENTS FOR THE LOCATIONS THAT THE STORMTRAP SYSTEM IS TO BE LOCATED.
   - 3.3. THE CONTRACTOR SHALL REMOVE ANY AND ALL EXPANDABLE OR COLLAPSIBLE SOILS AT THE DIRECTION OF A QUALIFIED GEOTECHNICAL ENGINEER.
   - 3.4. THE AGGREGATE FOUNDATION SHALL BE INSTALLED SUCH THAT THE AGGREGATE EXTENDS A MINIMUM OF 2'-0" PAST THE OUTSIDE OF THE SYSTEM (SEE DETAIL 1).
   - 3.5. THE ¾" AGGREGATE SHALL BE COMPACTED USING A VIBRATING ROLLER WITH ITS' FULL DYNAMIC FORCE APPLIED TO ACHIEVE A FLAT SURFACE.
   - 3.6. DISK, DRY AND COMPACT THE TOP 8" OF THE SUBGRADE SOILS TO 95% OF THE STANDARD DRY DENSITY AND 110% OPTIMUM MOISTURE CONTENT.
   - 3.7. AGGREGATE SHALL BE GRADED WITHIN +/- ¼" OF THE GRADE SHOWN ON THE PLANS.
   - 3.8. MINIMUM SOIL BEARING CAPACITY LISTED ON SHEET 1.0 SHALL BE VERIFIED IN FIELD BY OTHERS.
4. THE STORMTRAP MODULES SHALL BE PLACED SUCH THAT THE MAXIMUM SPACE BETWEEN ADJACENT MODULES DOES NOT EXCEED ¾" (SEE DETAIL 2). IF THE SPACE EXCEEDS ¾", THE MODULES SHALL BE RESET WITH APPROPRIATE ADJUSTMENT MADE TO LINE AND GRADE TO BRING THE SPACE INTO SPECIFICATION.
5. STORMTRAP MODULES ARE NOT WATERTIGHT. IF A WATERTIGHT SOLUTION IS REQUIRED, CONTACT STORMTRAP FOR RECOMMENDATIONS. THE WATERTIGHT APPLICATION IS TO BE PROVIDED AND IMPLEMENTED BY THE CONTRACTOR. THE CONTRACTOR IS RESPONSIBLE TO ENSURE THAT THE SELECTED WATERTIGHT SOLUTION PERFORMS AS SPECIFIED BY THE MANUFACTURER.
6. ALL EXTERIOR JOINTS BETWEEN ADJACENT STORMTRAP MODULES SHALL BE SEALED WITH 8" WIDE PRE-FORMED, COLD-APPLIED, SELF-ADHERING ELASTOMERIC RESIN, BONDED TO A WOVEN , HIGHLY PUNCTURE RESISTANT POLYMER WRAP, CONFORMING TO ASTM C891 AND SHALL BE INTEGRATED WITH PRIMER SEALANT AS APPROVED BY STORMTRAP (SEE DETAILS 3 & 4). THE JOINT WRAP DOES NOT PROVIDE A WATERTIGHT SEAL. THE SOLE PURPOSE OF THE JOINT WRAP IS TO PROVIDE A SILT AND SOIL TIGHT SYSTEM. THE ADHESIVE EXTERIOR JOINT WRAP SHALL BE INSTALLED ACCORDING TO THE FOLLOWING INSTALLATION INSTRUCTIONS:
   - 6.1. USE A BRUSH OR WET CLOTH TO THOROUGHLY CLEAN THE OUTSIDE SURFACE AT THE POINT WHERE THE JOINT WRAP IS TO BE APPLIED.
   - 6.2. A RELEASE PAPER PROTECTS THE ADHESIVE SIDE OF THE JOINT WRAP. PLACE THE ADHESIVE TAPE (ADHESIVE SIDE DOWN) AROUND THE STRUCTURE, REMOVING THE RELEASE PAPER AS YOU GO. PRESS THE JOINT WRAP FIRMLY AGAINST THE STORMTRAP MODULE SURFACE WHEN APPLYING.
7. IF THE CONTRACTOR NEEDS TO CANCEL ANY SHIPMENTS, THEY MUST DO SO 48 HOURS PRIOR TO THEIR SCHEDULED ARRIVAL AT THE JOB SITE. IF CANCELED AFTER THAT TIME, PLEASE CONTACT THE PROJECT MANAGER.
8. IF THE STORMTRAP MODULE(S) IS DAMAGED IN ANY WAY PRIOR, DURING, OR AFTER INSTALL, STORMTRAP, MUST BE CONTACTED IMMEDIATELY TO ASSESS THE DAMAGE AND TO DETERMINE WHETHER OR NOT THE MODULE(S) WILL NEED TO BE REPLACED. IF ANY MODULE ARRIVES AT THE JOBSITE DAMAGED DO NOT UNLOAD IT; CONTACT STORMTRAP, IMMEDIATELY. ANY DAMAGE NOT REPORTED BEFORE THE TRUCK IS UNLOADED WILL BE THE CONTRACTOR'S RESPONSIBILITY.
9. STORMTRAP MODULES CANNOT BE ALTERED IN ANY WAY AFTER MANUFACTURING WITHOUT WRITTEN CONSENT FROM STORMTRAP.

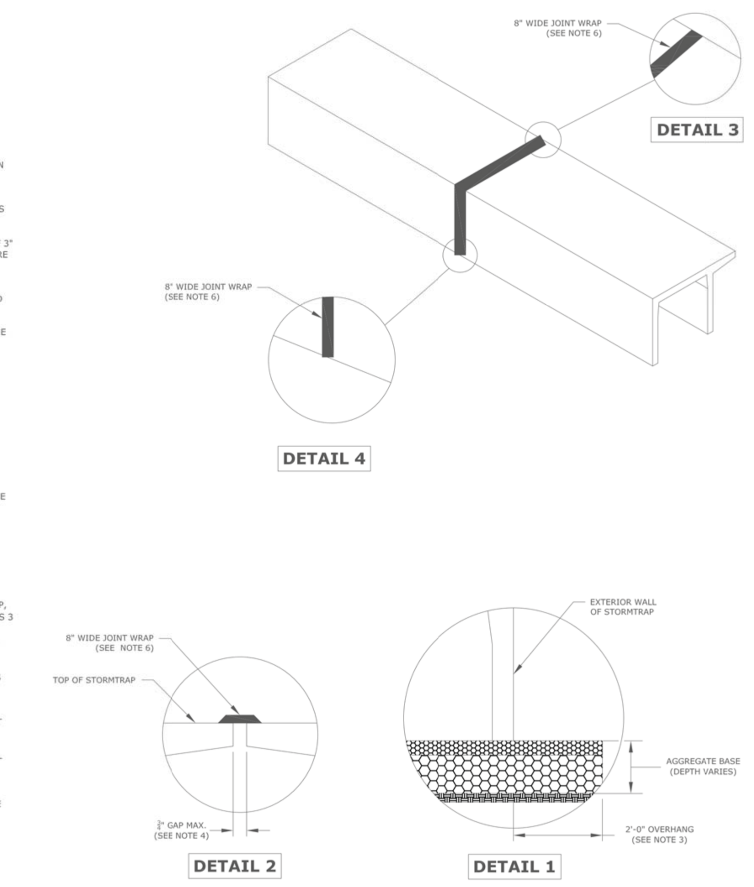

SHEET TITLE: SINGLETRAP INSTALLATION SPECIFICATIONS
SHEET NUMBER: 3.0

SHEET 3.1 – SINGLETRAP INSTALLATION SPECIFICATIONS

END PANEL ERECTION/INSTALLATION NOTES

1. END PANELS WILL BE SUPPLIED TO CLOSE OFF OPEN ENDS OF ROWS.
2. PANELS SHALL BE INSTALLED IN A TILT UP FASHION DIRECTLY ADJACENT TO OPEN END OF MODULE (REFER TO SHEET 2.0 FOR END PANEL LOCATIONS).
3. CONNECTION HOOKS WILL BE SUPPLIED WITH END PANELS TO SECURELY CONNECT PANEL TO ADJACENT STORMTRAP MODULE (SEE PANEL CONNECTION ELEVATION VIEW).
4. ONCE CONNECTION HOOK IS ATTACHED, LIFTING CLUTCHES MAY BE REMOVED.
5. JOINT WRAP SHALL BE PLACED AROUND PERIMETER JOINT PANEL (SEE SHEET 3.0).

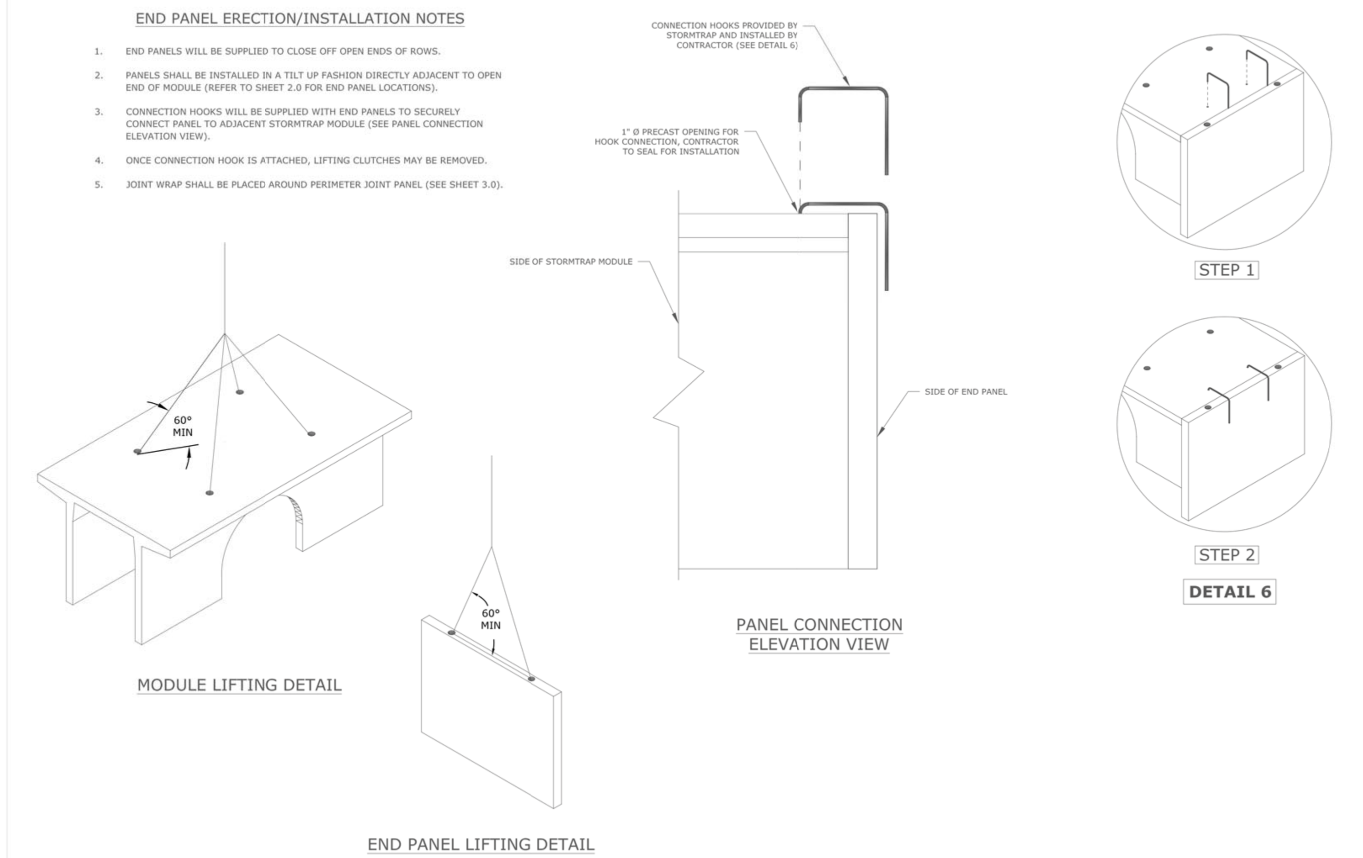

SHEET TITLE: SINGLETRAP INSTALLATION SPECIFICATIONS
SHEET NUMBER: 3.1

SHEET 4.0 – SINGLETRAP BACKFILL SPECIFICATIONS

ZONE CHART

ZONES	ZONE DESCRIPTIONS	REMARKS
ZONE 1 A	FOUNDATION AGGREGATE	#5 (¾") STONE AGGREGATE (SEE NOTE 4 FOR DESCRIPTION)
ZONE 1 B	FOUNDATION AGGREGATE	3" STONE AGGREGATE (SEE NOTE 5 FOR DESCRIPTION)
ZONE 2	BACKFILL	UNIFIED SOILS CLASSIFICATION (GW, GP, SW, SP) - SEE BELOW FOR APPROVED BACKFILL OPTIONS
ZONE 3	FINAL COVER OVERTOP	MATERIALS NOT TO EXCEED 120 PCF

FILL DEPTH	TRACK WIDTH	MAX VEHICLE WEIGHT (KIPS)	MAX GROUND PRESSURE
12"	12"	51.8	1690 psf
	18"	56.1	1219 psf
	24"	68.1	1111 psf
	30"	76.7	1000 psf
	36"	85.0	924 psf

NOTE:
TRACK LENGTH NOT TO EXCEED 15'-4".
ONLY TWO TRACKS PER VEHICLE.

APPROVED ZONE 2 BACKFILL OPTIONS

OPTION	REMARKS
¾" STONE AGGREGATE	THE STONE AGGREGATE SHALL CONSIST OF WASHED, CLEAN AND FREE DRAINING ANGULAR MATERIAL. THE SIZE OF THIS MATERIAL SHALL HAVE 100% PASSING THE 1" SIEVE WITH 0% TO 5% PASSING THE #8 SIEVE. THIS MATERIAL SHALL BE SEPARATED FROM NATIVE MATERIAL USING GEOFABRIC AROUND THE PERIMETER OF THE BACKFILL (ASTM SIZE #57) AS DETERMINED BY THE GEOTECHNICAL ENGINEER.
SAND	IMPORTED PURE SAND IS PERMITTED TO BE USED AS BACKFILL IF IT IS CLEAN AND FREE DRAINING. THE SAND USED FOR BACKFILLING SHALL HAVE LESS THAN 40% PASSING #40 SIEVE AND LESS THAN 5% PASSING #200 SIEVE. THIS MATERIAL SHALL BE SEPARATED FROM NATIVE MATERIAL USING GEOFABRIC AROUND THE PERIMETER OF THE SAND BACKFILL.
CRUSHED CONCRETE AGGREGATE	CLEAN, FREE DRAINING CRUSHED CONCRETE AGGREGATE MATERIAL CAN BE USED AS BACKFILL FOR STORMTRAP'S MODULES. THE SIZE OF THIS MATERIAL SHALL HAVE 100% PASSING THE 1" SIEVE WITH 0% TO 5% PASSING THE #8 SIEVE. THIS MATERIAL SHALL BE SEPARATED FROM NATIVE MATERIAL USING GEOFABRIC AROUND THE PERIMETER OF THE BACKFILL.
ROAD PACK	STONE AGGREGATE 100% PASSING THE 1-1/2" SIEVE WITH LESS THAN 12% PASSING THE #200 SIEVE (ASTM SIZE #467). GEOFABRIC AS PER GEOTECHNICAL ENGINEER RECOMMENDATION.

STORMTRAP ZONE INSTALLATION SPECIFICATIONS/PROCEDURES

1. THE FILL PLACED AROUND THE STORMTRAP MODULES MUST DEPOSITED ON BOTH SIDES AT THE SAME TIME AND TO APPROXIMATELY THE SAME ELEVATION. AT NO TIME SHALL THE FILL BEHIND ONE SIDE WALL BE MORE THAN 2'-0" HIGHER THAN THE FILL ON THE OPPOSITE SIDE. BACKFILL SHALL EITHER BE COMPACTED AND/OR VIBRATED TO ENSURE THAT BACKFILL AGGREGATE/STONE MATERIAL IS WELL SEATED AND PROPERLY INTER LOCKED. CARE SHALL BE TAKEN TO PREVENT ANY WEDGING ACTION AGAINST THE STRUCTURE, AND ALL SLOPES WITHIN THE AREA TO BE BACKFILLED MUST BE STEPPED OR SERRATED TO PREVENT WEDGING ACTION. CARE SHALL ALSO BE TAKEN AS NOT TO DISRUPT THE JOINT WRAP FROM THE JOINT DURING THE BACKFILL PROCESS. BACKFILL MUST BE FREE-DRAINING MATERIAL. SEE ZONE 2 BACKFILL CHART ON THIS PAGE FOR APPROVED BACKFILL OPTIONS. IF NATIVE EARTH IS SUSCEPTIBLE TO MIGRATION, CONFIRM WITH GEOTECHNICAL ENGINEER AND PROVIDE PROTECTION AS REQUIRED (PROVIDED BY OTHERS).
2. DURING PLACEMENT OF MATERIAL OVERTOP THE SYSTEM, AT NO TIME SHALL MACHINERY BE USED OVERTOP THAT EXCEEDS THE DESIGN LIMITATIONS OF THE SYSTEM. WHEN PLACEMENT OF MATERIAL OVERTOP, MATERIAL SHALL BE PLACED SUCH THAT THE DIRECTION OF PLACEMENT IS PARALLEL WITH THE OVERALL LONGITUDINAL DIRECTION OF THE SYSTEM WHENEVER POSSIBLE.
3. THE FILL PLACED OVERTOP THE SYSTEM SHALL BE PLACED AT A MINIMUM OF 6" LIFTS. AT NO TIME SHALL MACHINERY OR VEHICLES GREATER THAN THE DESIGN HS-20 LOADING CRITERIA TRAVEL OVERTOP THE SYSTEM WITHOUT THE MINIMUM DESIGN COVERAGE. IF TRAVEL IS NECESSARY OVERTOP THE SYSTEM PRIOR TO ACHIEVING THE MINIMUM DESIGN COVER, IT MAY BE NECESSARY TO REDUCE THE ULTIMATE LOAD/BURDEN OF THE OPERATING MACHINERY SO AS TO NOT EXCEED THE DESIGN CAPACITY OF THE SYSTEM. IN SOME CASES, IN ORDER TO ACHIEVE REQUIRED COMPACTION, HAND COMPACTION MAY BE NECESSARY IN ORDER NOT TO EXCEED THE ALLOTTED DESIGN LOADING. SEE CHART FOR TRACKED VEHICLE WIDTH AND ALLOWABLE MAXIMUM PRESSURE PER TRACK.
4. FREE DRAINING AGGREGATE - 80% AGGREGATE RETAINED ON ½" SIEVE MAJORITY OF AGGREGATE SIZE BETWEEN ½" AND 1" ONLY 5% OF MATERIAL PASSING #⅜ SIEVE.
5. FREE DRAINING, NO FINES, 3" AGGREGATE - MAJORITY OF STONE SIZE IN BETWEEN 1½" AND 3" - VERY SIMILAR TO AASHTO (#1, #2, #3, & #24) STONE AGGREGATE GRADATION.

INFILTRATION BASIN CONSTRUCTION NOTE:
THE BOTTOM OF ALL INFILTRATION BASINS SHALL BE SCARIFIED PRIOR TO PLACEMENT OF GEOTEXTILE FABRIC AND AGGREGATE.

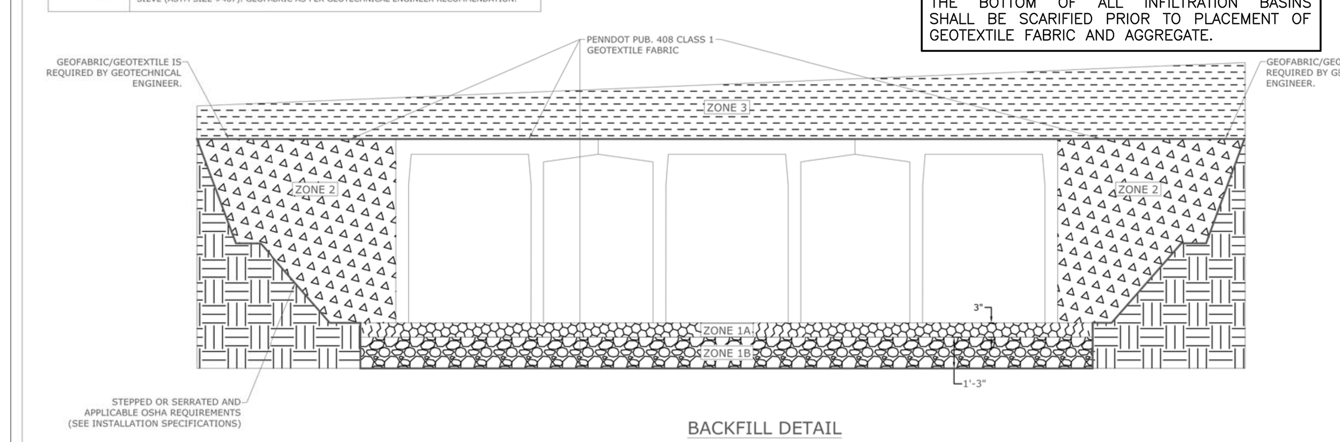

BACKFILL DETAIL

SHEET TITLE: SINGLETRAP BACKFILL SPECIFICATIONS
SHEET NUMBER: 4.0

STORM TRAP DETAILS
N.T.S.

ORIGINAL PLANS BEAR A REGISTRATION SEAL IN RED INK.
COMMONWEALTH OF PENNSYLVANIA — REGISTERED PROFESSIONAL ENGINEER — ERIC J. JANETKA — No. 050549-E

KELLY & CLOSE ENGINEERS
CONSULTING ENGINEERS & SURVEYORS
The Summit at Brandywine
1786 Wilmington Pike/Suite 300
Glen Mills, Pennsylvania 19342
610.358.9363 fax 610.358.9376

REV.	DATE	DESCRIPTION	BY
3	2/8/2019	REVISE PLAN PER TOWNSHIP CONSULTANT REVIEWS, NPDES PERMIT REVIEW	E.J.J.
2	10/5/2018	REVISED GRADING; REVISED SANITARY SEWER DESIGN; REVISED SWM	E.J.J.
1	9/10/2014	REVISED PER TWP 8-11-14 AND 8-18-14 REVIEW LETTERS	E.J.J.

date: 7/21/2014
scale: AS NOTED
drawn by: M.J.B.
checked by: E.J.J.
dwg. name: F-Dtls-PCSM.dwg
project no.: N/A

SHIRTZ FARM
110 SPROUL ROAD
EAST WHITELAND TOWNSHIP
CHESTER COUNTY, PENNSYLVANIA

NPDES PERMIT
RECORDING PLAN SHEET 3 OF 6

POST-CONSTRUCTION STORMWATER MANAGEMENT DETAILS (1 OF 3)

This document and all information and work product represented by and contained herein, is the sole and exclusive property of James C. Kelly & Associates, Inc., t/a Kelly & Close Engineers. The information contained herein is licensed only for limited use by the intended recipient, and no license, permission or authority is extended, directly or implied, to any party without express written permission of James C. Kelly & Associates, Inc.
Copyright, 2015, James C. Kelly & Associates, Inc.
All rights reserved

StormTrap®

PATENTS LISTED AT: [HTTP://STORMTRAP.COM/PATENT]

1287 WINDHAM PARKWAY
ROMEOVILLE, IL 60446
P:815-941-4549 / F:331-318-5347

RECOMMENDED
ACCESS OPENING SPECIFICATION

1. A TYPICAL ACCESS OPENING FOR THE STORMTRAP SYSTEM ARE 2'-0" IN DIAMETER. ACCESS OPENINGS LARGER THAN 3'-0" IN DIAMETER NEED TO BE APPROVED BY STORMTRAP. ALL OPENINGS MUST RETAIN AT LEAST 1'-0" OF CLEARANCE FROM THE END OF THE STORMTRAP MODULE UNLESS NOTED OTHERWISE. ALL ACCESS OPENINGS TO BE LOCATED ON INSIDE LEG UNLESS OTHERWISE SPECIFIED.
2. PLASTIC COATED STEEL STEPS PRODUCED BY M.A. INDUSTRIES PART #PS3-PFC OR APPROVED EQUAL (SEE STEP DETAIL) ARE PROVIDED INSIDE ANY MODULE WHERE DEEMED NECESSARY. THE HIGHEST STEP IN THE MODULE IS TO BE PLACED A DISTANCE OF 1'-0" FROM THE INSIDE EDGE OF THE STORMTRAP MODULES. ALL ENSUING STEPS SHALL BE PLACED WITH A MAXIMUM DISTANCE OF 1'-4" BETWEEN THEM. STEPS MAY BE MOVED OR ALTERED TO AVOID OPENINGS OR OTHER IRREGULARITIES IN THE MODULE.
3. STORMTRAP LIFTING INSERTS MAY BE RELOCATED TO AVOID INTERFERENCE WITH ACCESS OPENINGS OR THE CENTER OF GRAVITY OF THE MODULE AS NEEDED.
4. STORMTRAP ACCESS OPENINGS MAY BE RELOCATED TO AVOID INTERFERENCE WITH INLET AND/OR OUTLET PIPE OPENINGS SO PLACEMENT OF STEPS IS ATTAINABLE.
5. ACCESS OPENINGS SHOULD BE LOCATED IN ORDER TO MEET THE APPROPRIATE MUNICIPAL REQUIREMENTS. STORMTRAP RECOMMENDS AT LEAST TWO ACCESS OPENINGS PER SYSTEM FOR ACCESS AND INSPECTION.
6. USE PRECAST ADJUSTING RINGS AS NEEDED TO MEET GRADE. STORMTRAP RECOMMENDS FOR COVER OVER 2' TO USE PRECAST BARREL OR CONE INSPECTIONS. (PROVIDED BY OTHERS)

RECOMMENDED
PIPE OPENING SPECIFICATION

1. MINIMUM EDGE DISTANCE FOR AN OPENING ON THE OUTSIDE WALL SHALL BE NO LESS THAN 1'-0".
2. MAXIMUM OPENING SIZE TO BE DETERMINED BY THE MODULE HEIGHT. PREFERRED OPENING SIZE IS Ø 36" OR LESS. ANY OPENING NEEDED THAT DOES NOT FIT THIS CRITERIA SHALL BE BROUGHT TO THE ATTENTION OF STORMTRAP FOR REVIEW.
3. CONNECTING PIPES SHALL BE INSTALLED WITH A 1'-0" CONCRETE COLLAR, AND AN AGGREGATE CRADLE FOR AT LEAST ONE PIPE LENGTH (SEE PIPE CONNECTION DETAIL). A STRUCTURAL GRADE CONCRETE OR HIGH STRENGTH, NON-SHRINK GROUT WITH A MINIMUM 28 DAY COMPRESSIVE STRENGTH OF 3000 PSI SHALL BE USED.
4. THE ANNULAR SPACE BETWEEN THE PIPE AND THE HOLE SHALL BE FILLED WITH HIGH STRENGTH NON-SHRINK GROUT.

RECOMMENDED PIPE
INSTALLATION INSTRUCTIONS

1. CLEAN AND LIGHTLY LUBRICATE ALL OF THE PIPE TO BE INSERTED INTO STORMTRAP.
2. IF PIPE IS CUT, CARE SHOULD BE TAKEN TO ALLOW NO SHARP EDGES. BEVEL AND LUBRICATE LEAD END OF PIPE.
3. ALIGN CENTER OF PIPE TO CORRECT ELEVATION AND INSERT INTO OPENING.

NOTE: ALL ANCILLARY PRODUCTS/SPECIFICATIONS RECOMMENDED AND SHOWN ON THIS SHEET ARE RECOMMENDATIONS ONLY AND SUBJECT TO CHANGE PER THE INSTALLING CONTRACTOR AND/OR PER LOCAL MUNICIPAL CODE/REQUIREMENTS.

NOTE:
CONTRACTOR/BUILDER SHALL PROVIDE ALL SEALANT AND MANHOLE RISERS, FRAMES AND COVERS SHOWN ON THE STORMTRAP DRAWINGS. ALL MANHOLE COVERS SHALL BE CAST WITH THE WORD "STORM SEWER" IN 2" TALL LETTERS.

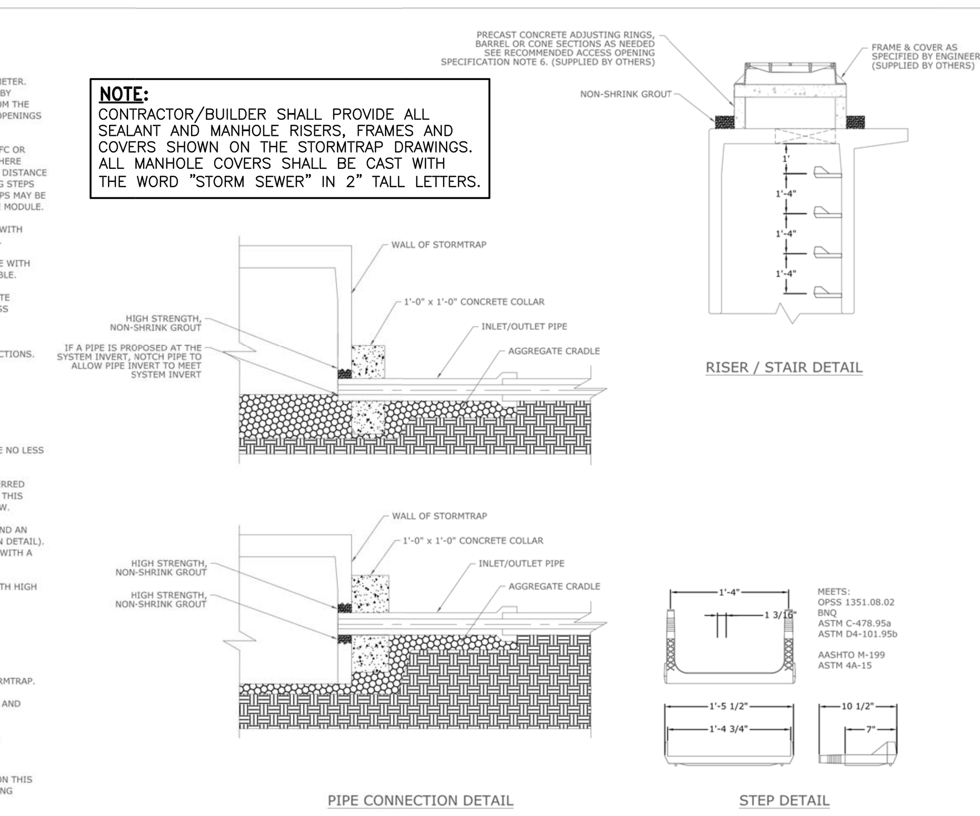

ENGINEER INFORMATION:
KELLY & CLOSE ENGINEERS
1786 WILMINGTON PIKE
SUITE 300
GLEN MILLS, PA
610-358-9363

PROJECT INFORMATION:
SHIRTZ FARM
SUBDIVISION
MALVERN, PA

CURRENT ISSUE DATE: 2/12/2019

ISSUED FOR: PRELIMINARY

REV.	DATE:	ISSUED FOR:	DWN BY:
3	2/12/2019	PRELIMINARY	JW
2	9/7/2018	PRELIMINARY	JW
1	8/31/2018	PRELIMINARY	JW

SCALE: NTS

SHEET TITLE: RECOMMENDED PIPE / ACCESS OPENING SPECIFICATIONS

SHEET NUMBER: 5.0

StormTrap® 1287 WINDHAM PARKWAY ROMEOVILLE, IL 60446 P:815-941-4549 / F:331-318-5347

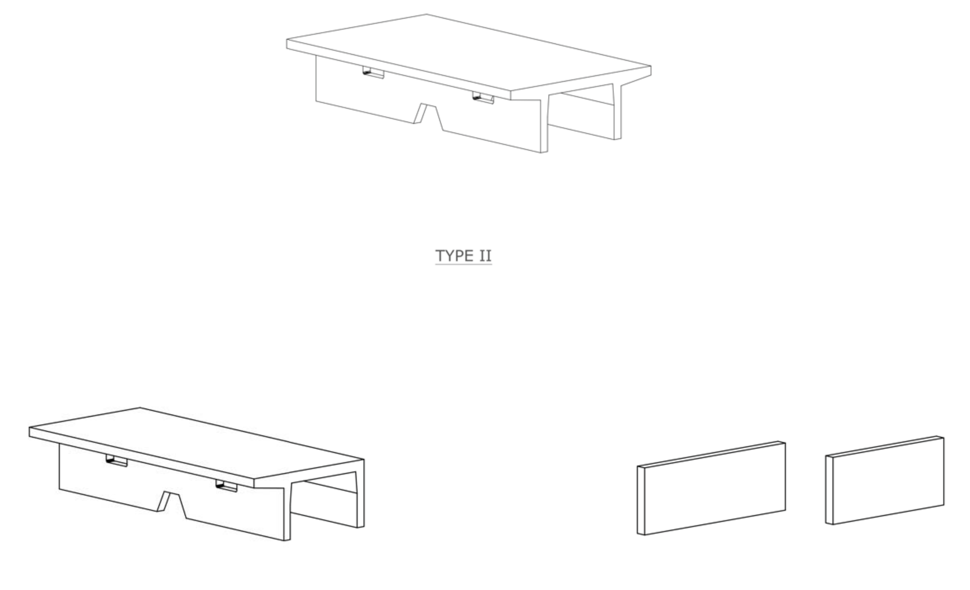

NOTES:
1. OPENING LOCATIONS AND SHAPES MAY VARY.
2. SP - INDICATES A MODULE WITH MODIFICATIONS.
3. P - INDICATES A MODULE WITH A PANEL ATTACHMENT.
4. POCKET WINDOW OPENINGS ARE OPTIONAL.

ENGINEER INFORMATION: KELLY & CLOSE ENGINEERS 1786 WILMINGTON PIKE SUITE 300 GLEN MILLS, PA 610-358-9363
PROJECT INFORMATION: SHIRTZ FARM SUBDIVISION MALVERN, PA
CURRENT ISSUE DATE: 2/12/2019
ISSUED FOR: PRELIMINARY

REV.	DATE:	ISSUED FOR:	DWN BY:
3	2/12/2019	PRELIMINARY	JW
2	9/7/2018	PRELIMINARY	JW
1	8/31/2018	PRELIMINARY	JW

SCALE: NTS

SHEET TITLE: SINGLETRAP MODULE TYPES

SHEET NUMBER: 7.0

NOTES:
1. THE APPROVED GEOWEB SHALL BE PRESTO GEOWEB (GW30V3). THE GEOWEB NOMINAL DIMENSIONS SHALL BE 9-FT x 25-FT.
2. THE CONCRETE SPLASH PAD AND GEOWEB SHALL BE INSTALLED PRIOR TO INSTALLATION OF THE STORMTRAP MODULES.
3. THE GEOWEB INFILL MATERIAL SHALL BE #5 AGGREGATE.
4. THE CONCRETE SPLASH PAD SHALL BE INSTALLED WITHIN THE GEOWEB AND IS REQUIRED AT ALL PIPE ENTRY LOCATIONS.
5. THE GEOWEB EDGE SHALL BE INSTALLED 1-FT BEYOND THE OUTER PERIMETER OF THE STORMTRAP SYSTEM.
6. THE GEOWEB LONGITUDINAL DIMENSION (25-FT) SHALL BE INSTALLED PARALLEL TO THE STORMTRAP LEGS.
7. THE CONCRETE SPLASH PAD AND GEOWEB SHALL BE CENTERED AT THE PIPE PENETRATION.
8. REFER TO SPLASH PAD LAYOUT FOR CONCRETE SPLASH PAD DIMENSIONS.
9. IF ANY PRODUCT OTHER THAN PRESTO GEOWEB IS TO BE INSTALLED, THE PRODUCT MANUFACTURER IS REQUIRED TO SUBMIT A LETTER STATING THAT THE PRODUCT IS EQUAL OR BETTER THEN PRESTO GEOWEB, BOTH IN PERFORMANCE AND IN STRUCTURAL CAPACITY.
10. ALL GEOWEB AND SPLASH PADS TO BE SUPPLIED AND INSTALLED BY CONTRACTOR.
11. A CONCRETE SPLASH PAD IS REQUIRED AT ANY ACCESS OPENING THAT HAS AN OPEN GRATE FOR DRAINAGE. THE CONCRETE SPLASH PAD SHALL EXTEND BETWEEN THE UNIT LEG WALLS AND 3'-0" FROM THE CENTERLINE OF THE OPENING ON BOTH SIDES UNLESS SPECIFIED OTHERWISE ON THE SPLASH PAD LAYOUT. GEOWEB IS NOT REQUIRED UNDER ACCESS OPENINGS.

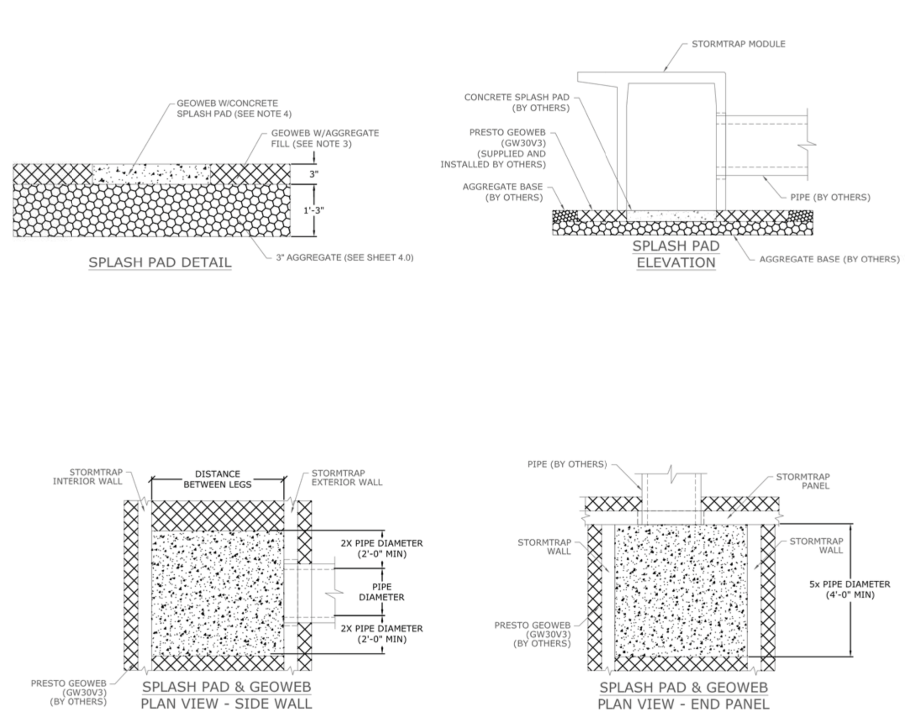

SPLASH PAD CONFIGURATION

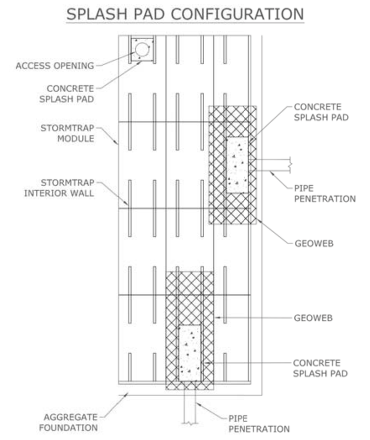

StormTrap® 1287 WINDHAM PARKWAY ROMEOVILLE, IL 60446 P:815-941-4549 / F:331-318-5347
ENGINEER INFORMATION: KELLY & CLOSE ENGINEERS 1786 WILMINGTON PIKE SUITE 300 GLEN MILLS, PA 610-358-9363
PROJECT INFORMATION: SHIRTZ FARM SUBDIVISION MALVERN, PA
CURRENT ISSUE DATE: 2/12/2019
ISSUED FOR: PRELIMINARY

REV.	DATE:	ISSUED FOR:	DWN BY:
3	2/12/2019	PRELIMINARY	JW
2	9/7/2018	PRELIMINARY	JW
1	8/31/2018	PRELIMINARY	JW

SCALE: NTS

SHEET TITLE: SPLASH PAD & GEOWEB DETAILS

SHEET NUMBER: 6.0

NOTE: IF A WATERTIGHT SOLUTION IS REQUIRED FOR THIS OUTLET CONTROL STRUCTURE, STORMTRAP RECOMMENDS THE USE OF XYPEX OR SIKAFLEX MATERIALS (OR APPROVED EQUIVALENT). WATERPROOFING MATERIALS TO BE SUPPLIED AND INSTALLED BY THE INSTALLING CONTRACTOR. CONTACT STORMTRAP FOR A LIST OF APPROVED APPLICATORS.

NOTE:
CONTRACTOR/BUILDER SHALL PROVIDE ALL SEALANT AND MANHOLE RISERS, FRAMES AND COVERS SHOWN ON THE STORMTRAP DRAWINGS. ALL MANHOLE COVERS SHALL BE CAST WITH THE WORD "STORM SEWER" IN 2" TALL LETTERS.

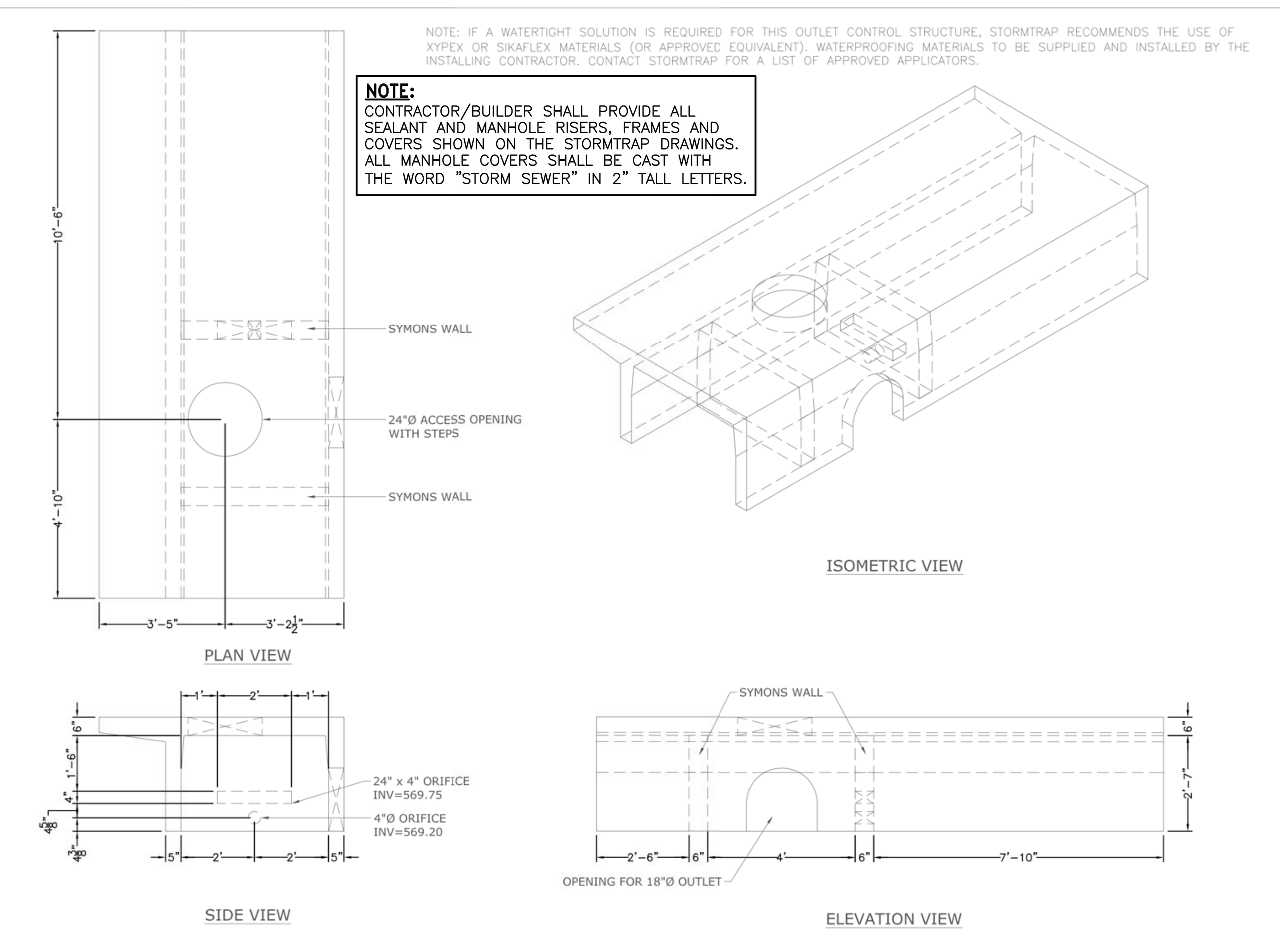

StormTrap® 1287 WINDHAM PARKWAY ROMEOVILLE, IL 60446 P:815-941-4549 / F:331-318-5347
ENGINEER INFORMATION: KELLY & CLOSE ENGINEERS 1786 WILMINGTON PIKE SUITE 300 GLEN MILLS, PA 610-358-9363
PROJECT INFORMATION: SHIRTZ FARM SUBDIVISION MALVERN, PA
CURRENT ISSUE DATE: 2/12/2019
ISSUED FOR: PRELIMINARY

REV.	DATE:	ISSUED FOR:	DWN BY:
3	2/12/2019	PRELIMINARY	JW
2	9/7/2018	PRELIMINARY	JW
1	8/31/2018	PRELIMINARY	JW

SCALE: NTS

SHEET TITLE: OUTLET CONTROL STRUCTURE DETAILS

SHEET NUMBER: 8.0

STORM TRAP DETAILS
N.T.S.

MAIN INFILTRATION FACILITY MAINTENANCE NOTES:

MAIN INFILTRATION FACILITY (STORM TRAP):

- INSPECT SYSTEM ON AN ANNUAL BASIS. THE INSPECTION SHOULD BE CONDUCTED BEFORE THE STORMWATER SEASON BEGINS TO BE SURE THAT EVERYTHING IS FUNCTIONING PROPERLY FOR THE UPCOMING STORM SEASON. INSPECTION SHOULD BE DONE AT LEAST 2–3 DAYS SINCE THE MOST RECENT RAIN EVENT TO ALLOW FOR DRAINING. VISUALLY INSPECT THE SYSTEM AT ALL MANHOLE LOCATIONS. UTILIZING A SEDIMENT POLE, MEASURE AND DOCUMENT THE AMOUNT OF SILT AT EACH MANHOLE LOCATION. INSPECT EACH PIPE OPENING TO ENSURE THAT THE SILT LEVEL OR ANY FOREIGN OBJECTS ARE NOT BLOCKING THE PIPES. BE SURE TO INSPECT THE OUTLET PIPE(S) BECAUSE THIS IS TYPICALLY THE SMALLEST PIPE IN THE SYSTEM.
- CHECK STRUCTURES FOR LARGE TRASH OR BLOCKAGES. REMOVE ANY BLOCKAGES IF YOU CAN DURING THE INSPECTION PROCESS ONLY IF YOU CAN DO SO SAFELY FROM THE TOP OF THE SYSTEM WITHOUT ENTERING INTO THE SYSTEM. DO NOT GO INTO THE SYSTEM UNDER ANY CIRCUMSTANCES WITHOUT PROPER VENTILATION EQUIPMENT AND TRAINING.
- MEASURE THE SEDIMENT LEVEL OF THE SYSTEM AND RECORD THE SEDIMENT LEVEL AT EACH MANHOLE IN ORDER GET A HISTORY OF SEDIMENT THAT CAN BE GRAPHED OVER TIME (I.E. YEARS) IN ORDER TO ESTIMATE WHEN THE SYSTEM WILL NEED TO BE MAINTAINED NEXT. KEEP THESE RECORDS TO VERIFY THAT THE INSPECTION PROCESS WAS ACTUALLY. THE SEDIMENT LEVEL IN THE UNDERGROUND DETENTION SYSTEM CAN BE DETERMINED FROM THE OUTSIDE OF THE SYSTEM BY OPENING UP ALL THE MANHOLES AND USING A SEDIMENT POLE TO MEASURE THE AMOUNT OF SEDIMENT AT EACH LOCATION. FORCE THE STICK TO THE BOTTOM OF THE SYSTEM AND THEN REMOVE IT AND MEASURE THE AMOUNT OF SEDIMENT AT THAT LOCATION.
- BLOCKAGES SHOULD BE SAFELY REMOVED AS SOON AS PRACTICAL SO THAT THE STORMWATER DETENTION SYSTEM WILL FILL AND DRAIN PROPERLY BEFORE THE NEXT STORMWATER EVENT. THE DRY DETENTION SYSTEM SHOULD BE COMPLETELY CLEANED WHENEVER THE SEDIMENT OCCUPIES MORE THAN 10% TO 15% OF THE ORIGINALLY DESIGNED SYSTEM'S VOLUME. THE WET DETENTION SYSTEM SHOULD BE CLEANED WHEN THE SEDIMENT OCCUPIES MORE THAN 30% OR 1/3RD OF THE ORIGINALLY DESIGNED SYSTEM'S VOLUME. THE SYSTEM SHOULD BE COMPLETELY CLEANED BACK TO 100% OF THE ORIGINALLY DESIGNED STORAGE VOLUME WHENEVER THE ABOVE SEDIMENT LEVELS HAVE BEEN REACHED. BE SURE TO WAIT AT LEAST 3 DAYS AFTER A STORMWATER EVENT TO BE SURE THAT THE SYSTEM IS COMPLETELY DRAINED (IF IT IS A DRY DETENTION SYSTEM), AND ALL OF THE SEDIMENTS HAVE SETTLED TO THE BOTTOM OF THE SYSTEM (IF IT IS A WET DETENTION SYSTEM).
- DO NOT ENTER THE SYSTEM UNLESS YOU ARE PROPERLY TRAINED, EQUIPPED, AND QUALIFIED TO ENTER A CONFINED SPACE AS IDENTIFIED BY LOCAL OCCUPATIONAL SAFETY AND HEALTH REGULATIONS. REMOVE THE MANHOLE COVER AT THE TOP OF THE SYSTEM AND LOWER A VACUUM HOSE INTO ONE OF THE ROWS OF THE STORMTRAP SYSTEM. OPEN UP THE MANHOLE AT THE OPPOSITE END OF THE STORMTRAP AND USE SEWER JETTING EQUIPMENT TO FORCE WATER IN THE SAME ROW FROM ONE END OF THE STORMTRAP ROW TO THE OPPOSITE SIDE. THE ROWS OF THE STORMTRAP ARE COMPLETELY OPEN IN ONE CONTIGUOUS CHANNEL FROM ONE END TO THE OTHER FOR EASY CLEANING. PLACE THE VACUUM HOSE AND THE SEWER JETTING EQUIPMENT IN THE NEXT ROW AND REPEAT THE PROCESS UNTIL ALL OF THE ROWS HAVE BEEN CLEANED. WHEN FINISHED, REPLACE ALL COVERS THAT WERE REMOVED AND DISPOSE OF THE COLLECTED MATERIAL PROPERLY. FLOATABLES AND ANY OIL SHOULD BE REMOVED IN A SEPARATE PROCEDURE PRIOR TO THE REMOVAL OF ALL SEDIMENT. THE FLOATABLE TRASH IS REMOVED FIRST BY USING A BUCKET STRAINER TO CAPTURE AND REMOVE ANY FLOATING DEBRIS. THE FLOATABLE OILS ARE THEN REMOVED OFF THE TOP OF THE WATER BY USING THE VACUUM TRUCK TO SUCK OFF ANY FLOATABLE FLUIDS AND LIQUIDS. USE THE VACUUM TRUCK TO GENTLY REMOVE THE CLARIFIED WATER ABOVE THE SEDIMENT LAYER. THE FINAL STEP IS TO CLEAN THE SEDIMENT FOR EACH ROW.

NOTE: ALL STORM SEWER INLETS, MANHOLES, AND OUTLET STRUCTURES IN EXCESS OF 5 FEET DEEP MUST BE FITTED WITH STEPS PURSUANT TO PENNDOT PUBLICATION 408 AND 72M.

INFILTRATION BASIN CONSTRUCTION NOTE:
THE BOTTOM OF ALL INFILTRATION BASINS SHALL BE SCARIFIED PRIOR TO PLACEMENT OF GEOTEXTILE FABRIC AND AGGREGATE.

ROOF DOWNSPOUTS AND ROOF LEADER SYSTEM NOTE:
DESIGN OF THE ROOF LEADER SYSTEMS SHOWN ON THIS PLAN, IS SCHEMATIC. SPECIFIC LOCATION OF ROOF DOWNSPOUTS IS APPROXIMATE AND SUBJECT TO CHANGE BASED ON FINAL ARCHITECTURAL DESIGN, UNFORESEEN UTILITY CONFLICTS OR CONFLICTING SITE FEATURES. STORMWATER RUNOFF FROM DWELLING ROOF AREAS MUST BE CONVEYED TO THE INFILTRATION BASINS (EXCEPT WHERE SPECIFICALLY IDENTIFIED OTHERWISE) BY WAY OF THE 8 INCH DIAMETER ROOF LEADER PIPE SYSTEM (THE HORIZONTAL PIPE SYSTEM THAT COLLECTS THE VERTICAL ROOF DISCHARGE PIPES), WHICH IS MUST CONVEY THE 100–YEAR FREQUENCY DESIGN STORM, AT MINIMUM SLOPE OF 0.50% (PIPE SLOPE MAY BE GREATER THAN 0.50%). ROOF LEADERS SYSTEM MUST CONFORM TO THE MINIMUM SIZES, DEPTHS AND CONSTRUCTION SPECIFICATIONS SHOWN ON THIS PLAN.

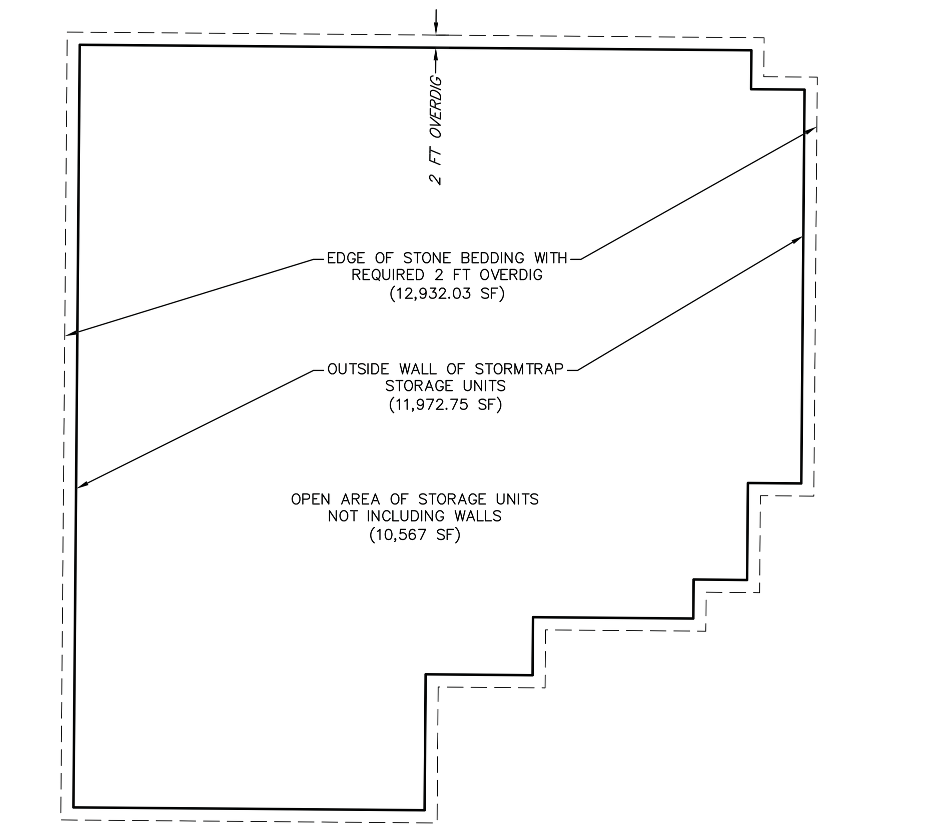

STORAGE VOLUME CALCULATION: THE TOTAL STORAGE VOLUME OF THE INFILTRATION BASIN BY STORMTRAP IS BASED ON THE CUMMULATIVE TOTAL OF THE FOLLOWING:

1. VOLUME OF VOIDS IN THE STONE BED WITH 40% VOID RATION AND 2 FT OVERDIG (REFER DIAGRAM ABOVE). VOLUME IN STONE = 12,932.03 X 1.50 FEET X 40% = 7,759.21 CF. STAGE–AREA–STORAGE TABLE IN CALCULATIONS UTILIZES A STORAGE AREA OF 5,172.81 SF FROM 567.5 TO 568.99. 5,172.81 = 12,932.03 X 40%.
2. VOLUME OF STORAGE UNITS BASED ON INTERIOR OPEN AREA OF 10,567 SF, NOT INCLUDING WALLS (AS PROVIDED BY STORMTRAP FOR THE DESIGN SHOWN ON THE PLAN) MULTIPLIED BY 2'–4" (UNIT HEIGHT OF 2'7" MINUS 3 INCH WALL EMBEDMENT IN STONE SUBBASE) = 24,621.11 CF. STAGE–AREA–STORAGE TABLE IN CALCULATIONS UTILIZES A STORAGE AREA OF 10,453 SF FROM 569.00 TO 571.33. (571.33 MINUS 569.00 = 2'–4")

TOTAL BASIN VOLUME = 7,759.21 + 24,621.11 = 32,380.32

NOTE: MANUFACTURER DRAWINGS INDICATE SLIGHTLY GREATER VOLUME BECAUSE THEY ARE ACCOUNTING FOR ADDITIONAL STONE BACKFILL AROUND PERIMETER OF STRUCTURE (BEYOND THE 2 FEET OVERDIG) AS PART OF THE VOLUME AND ARE NOT CONSIDERING THE 3 INCH EMBEDMENT DEPTH OF THE WALLS OF THE UNITS IN THE STONE. VOLUME SHOWN IN THIS CALCULATION IS CONSERVATIVE.

MAIN INFILTRATION BED STORAGE VOLUME SUMMARY
N.T.S.

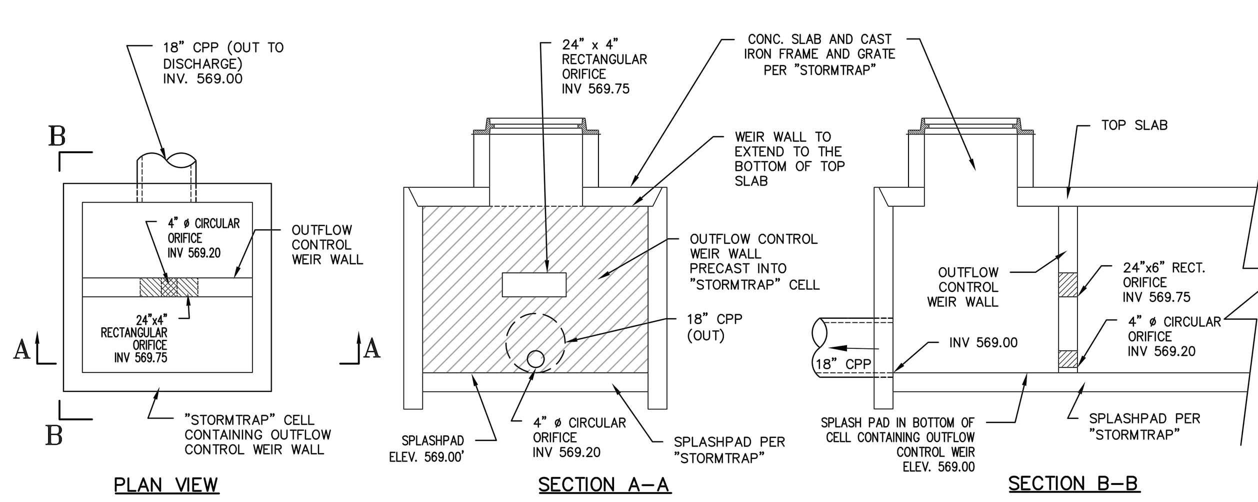

NOTE: REFER TO "STORMTRAP" UNDERGROUND BASIN CONSTRUCTION PLAN FOR SPECIFIC DETAILS RELATED TO THE BASIN OUTFLOW CONTROL STRUCTURE, WHICH MUST BE CONSISTENT WITH THE DIMENSIONAL AND ELEVATION INFORMATION PROVIDED IN THIS SCHEMATIC DETAIL.

MAIN INFILTRATION BED OUTLET STRUCTURE
N.T.S.

NPDES PERMIT

RECORDING PLAN SHEET 4 OF 6

ORIGINAL PLANS BEAR A REGISTRATION SEAL IN RED INK.

COMMONWEALTH OF PENNSYLVANIA REGISTERED PROFESSIONAL ENGINEER ERIC J. JANETKA No. 050549-E

KELLY & CLOSE ENGINEERS
CONSULTING ENGINEERS & SURVEYORS
The Summit at Brandywine
1786 Wilmington Pike/Suite 300
Glen Mills, Pennsylvania 19342
610.358.9363 fax 610.358.9376

REV.	DATE	DESCRIPTION	BY
3	2/8/2019	REVISE PLAN PER TOWNSHIP CONSULTANT REVIEWS, NPDES PERMIT REVIEW	E.J.J.
2	10/5/2018	REVISED GRADING; REVISED SANITARY SEWER DESIGN; REVISED SWM	E.J.J.
1	9/10/2014	REVISED PER TWP 8-11-14 AND 8-18-14 REVIEW LETTERS	E.J.J.

date: 7/21/2014
scale: SCALE
drawn by: M.J.B.
checked by: E.J.J.
dwg. name: F-Dtls-PCSM.dwg
project no.: N/A

SHIRTZ FARM
110 SPROUL ROAD
EAST WHITELAND TOWNSHIP
CHESTER COUNTY, PENNSYLVANIA

POST-CONSTRUCTION STORMWATER MANAGEMENT DETAILS (2 OF 3)

This document and all information and work product represented by and contained herein, is the sole and exclusive property of James C. Kelly & Associates, Inc., t/a Kelly & Close Engineers. The information contained herein is licensed only for limited use by the intended recipient, and no license, permission or authority is extended, directly or implied, to any party without express written permission of James C. Kelly & Associates, Inc.
Copyright, 2015, James C. Kelly & Associates, Inc. All rights reserved

PLEASE REFER TO GRADING PLAN FOR SWALE ELEVATIONS AND GRADING; REFER TO EROSION SEDIMENT CONTROL DETAILS AND STORMWATER MANAGEMENT REPORT – VEGETATED CHANNEL DESIGN WORKSHEETS FOR ADDITIONAL SWALE DIMENSIONS AND CALCULATIONS; AND REFER TO PCSM PLAN FOR GRASS SWALE MAINTENANCE AND CONSTRUCTION SEQUENCE NOTES.

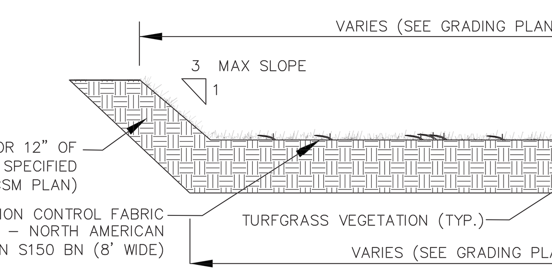

VEGETATED DRAINAGE SWALE

N.T.S.

SOIL AMENDED/RESTORATION SEQUENCE OF CONSTRUCTION:

1. GRADE SURFACE TO FINISHED GRADE ELEVATIONS AS SOON AS PRACTICAL FOLLOWING COMPLETION OF INFILTRATION FACILITY INSTALLATION.
2. IN THE DESIGNATED SOIL AMENDED AREAS, TILL THE GROUND AND MIX IN SOIL COMPOST TO DEPTH INDICATED ON PLANS. THIS IS A CRITICAL STEP WHICH REQUIRES OVERSIGHT BY A LICENSED PROFESSIONAL.
3. IMMEDIATELY SEE AND MULCH DISTURBED AREAS ONCE FINAL GRADE IS ESTABLISHED IN ACCORDANCE WITH THE PERMANENT SEEDING SCHEDULE.
4. MAINTAIN EROSION AND SEDIMENTATION CONTROL DEVISES UNTIL SITE WORK IS COMPLETE AND A UNIFORM 70% PERENNIAL VEGETATIVE COVER IS ESTABLISHED.

SOIL AMENDMENT AND RESTORATION INSPECTION/MAINTENANCE PROCEDURES:

1. THE SOIL RESTORATION PROCESS MAY NEED TO BE REPEATED OVER TIME, DUE TO COMPACTION BY USE AND/OR SETTLING.
2. SOIL AMENDMENT AREA SHALL BE INSPECTED AT LEAST 4 TIMES PER YEAR FOR SIGNS OF COMPACTION. TO REMEDY COMPACTION, TILL THE SOIL 12" AND MIX IN COMPOST.

GENERAL NOTES:

1. AMENDED SOIL SHOULD MEET ALL THE SPECIFICATIONS LISTED BELOW AND SHOULD BE A FERTILE, NATURAL SOIL, FREE FROM LARGE STONES, ROOTS, STICKS, CLODS, PLANTS, PEAT, SOD, POCKETS OF COARSE SAND, PAVEMENT AND BUILDING DEBRIS, GLASS, NOXIOUS WEEDS INCLUDING INVASIVE SPECIES, INFESTATIONS OF UNDESIRABLE ORGANISMS AND DISEASE CAUSING PATHOGENS, AND OTHER EXTRANEOUS MATERIALS HARMFUL TO PLANT GROWTH.
2. THE TEXTURE OF PLANTING SOIL SHOULD CONFORM TO THE CLASSIFICATION WITHIN THE UNITED STATES DEPARTMENT OF AGRICULTURE TRIANGLE FOR SANDY LOAM OR LOAMY SAND. PLANTING SOIL SHOULD BE A MIXTURE OF SAND, SILT, AND CLAY PARTICLES AS REQUIRED TO MEET THE CLASSIFICATION. RANGES OF PARTICLE SIZE DISTRIBUTION, AS DETERMINED BY PIPETTE METHOD IN COMPLIANCE WITH ASTM F-1632, ARE AS FOLLOWS:
   - SAND (0.05 TO 2.0 MM): 50 – 85%
   - SILT (0.002 TO 0.05MM): 40% MAXIMUM
   - CLAY (LESS THAN 0.002MM): 10% MAXIMUM
   - GRAVEL (2.0 TO 12.7 MM): 15% MAXIMUM
3. PLANTING SOIL SHOULD BE SCREENED AND FREE OF STONES LARGER THAN A HALF-INCH (12.7 MILLIMETERS) IN ANY DIMENSION. NO MORE THAN 10% OF THE SOIL VOLUME SHOULD BE COMPOSED OF SOIL PEDS GREATER THAN ONE INCH.
4. CLODS, OR NATURAL CLUMPS OF SOILS, GREATER THAN THREE INCHES IN ANY DIMENSION SHOULD BE ABSENT FROM THE PLANTING SOIL. SMALL CLODS RANGING FROM ONE TO THREE INCHES AND PEDS, NATURAL SOIL CLUMPS UNDER ONE INCH IN ANY DIMENSION, MAY BE PRESENT BUT SHOULD NOT MAKE UP MORE THAN 10% OF THE SOIL BY VOLUME.
5. THE PH OF THE PLANTING SOIL SHOULD HAVE A RANGE OF 5.8 TO 7.1.
6. SOLUBLE SALTS SHOULD BE LESS THAN 2.0 MMHOS/CM (DS/M), TYPICALLY AS MEASURED BY 1:2 SOIL-WATER RATIO BASIC SOIL SALINITY TESTING. SODIC SOILS (EXCHANGEABLE SODIUM PERCENTAGE GREATER THAN 15 AND/OR SODIUM ADSORPTION RATIO GREATER THAN 13) ARE NOT ACCEPTABLE FOR USE REGARDLESS OF AMENDMENT.
7. ORGANIC CONTENT OF PLANTING SOIL SHOULD HAVE A RANGE OF 3% TO 15% BY WEIGHT, AS DETERMINED BY LOSS ON IGNITION (ASTM D2974). TO ADJUST ORGANIC CONTENT, PLANTING SOIL MAY BE AMENDED, PRIOR TO PLACING AND FINAL GRADING, WITH THE ADDITION OF ORGANIC COMPOST.
8. NATIVE GRASS SEED MIX MUST BE FREE OF WEED SEEDS.
9. AMENDED SOIL MUST CONTAIN SUFFICIENT SAND CONTENT IN ORDER TO ACHIEVE A MINIMUM SURFACE INFILTRATION RATE OF 2" PER HOUR.

*** SOME INFORMATION TAKEN FROM THE PHILADELPHIA WATER DEPARTMENT STORMWATER MANAGEMENT WEBSITE, CHAPTER 4 – STORMWATER MANAGEMENT PRACTICE GUIDANCE, 4.1 BIOINFILTRATION/BIORENTENTION

AMENDED SOIL NOTES

N.T.S.

NOTE: ALL STORM SEWER INLETS, MANHOLES, AND OUTLET STRUCTURES IN EXCESS OF 5 FEET DEEP MUST BE FITTED WITH STEPS PURSUANT TO PENNDOT PUBLICATION 408 AND 72M.

ROOF DOWNSPOUTS AND ROOF LEADER SYSTEM NOTE:

DESIGN OF THE ROOF LEADER SYSTEMS SHOWN ON THIS PLAN, IS SCHEMATIC. SPECIFIC LOCATION OF ROOF DOWNSPOUTS IS APPROXIMATE AND SUBJECT TO CHANGE BASED ON FINAL ARCHITECTURAL DESIGN, UNFORESEEN UTILITY CONFLICTS OR CONFLICTING SITE FEATURES. STORMWATER RUNOFF FROM DWELLING ROOF AREAS MUST BE CONVEYED TO THE INFILTRATION BASINS (EXCEPT WHERE SPECIFICALLY IDENTIFIED OTHERWISE) BY WAY OF THE 8 INCH DIAMETER ROOF LEADER PIPE SYSTEM (THE HORIZONTAL PIPE SYSTEM THAT COLLECTS THE VERTICAL ROOF DISCHARGE PIPES), WHICH IS MUST CONVEY THE 100-YEAR FREQUENCY DESIGN STORM, AT MINIMUM SLOPE OF 0.50% (PIPE SLOPE MAY BE GREATER THAN 0.50%). ROOF LEADERS SYSTEM MUST CONFORM TO THE MINIMUM SIZES, DEPTHS AND CONSTRUCTION SPECIFICATIONS SHOWN ON THIS PLAN.

SNOUT MAINTENANCE NOTES:

I. FIRST YEAR ONLY:

A. MONTHLY MONITORING OF A NEW INSTALLATION AFTER THE SITE HAS BEEN STABILIZED.
B. MEASUREMENTS SHOULD BE TAKEN AFTER EACH RAIN EVENT OF 0.5 INCHES OR MORE, OR MONTHLY, AS DETERMINED BY LOCAL WEATHER CONDITIONS.
C. CHECKING SEDIMENT DEPTH AND NOTING THE SURFACE POLLUTANTS IN THE STRUCTURE WILL BE HELPFUL IN PLANNING MAINTENANCE. RAINFALL VOLUME VS. SEDIMENT AND DEBRIS CAPTURE CAN THEN BE PLOTTED AS AN ACCURATE PREDICTOR OF SERVICE INTERVALS.

II. MAINTENANCE AFTER THE FIRST YEAR:

A. THE POLLUTANTS COLLECTED IN SNOUT EQUIPPED STRUCTURES WILL CONSIST OF FLOATABLE DEBRIS, TRASH AND OILS ON THE SURFACE OF THE CAPTURED WATER, AND GRIT AND SEDIMENT ON THE BOTTOM OF THE STRUCTURE.
B. IT IS BEST TO SCHEDULE MAINTENANCE BASED ON THE SOLIDS COLLECTED IN THE SUMP.
C. OPTIMALLY, THE STRUCTURE SHOULD BE CLEANED WHEN THE SUMP IS HALF FULL (E.G. WHEN 2 FEET OF MATERIAL COLLECTS IN A 4 FOOT SUMP, CLEAN IT OUT).
D. FOR FLOATABLES AND TRASH ONLY (WITH OR WITHOUT TRASH SCREEN), SERVICE WHEN 6" OF FLOATING MATERIAL ACCUMULATES ON SURFACE ABOVE STATIC WATER LEVEL.
E. STRUCTURES SHOULD BE CLEANED IF A SPILL OR OTHER INCIDENT CAUSES A LARGER THAN NORMAL ACCUMULATION OF POLLUTANTS IN A STRUCTURE.
F. MAINTENANCE IS BEST DONE WITH A VACUUM TRUCK.
G. IF BIO-SKIRTS™ ARE BEING USED IN THE STRUCTURE TO ENHANCE HYDROCARBON CAPTURE AND/OR BACTERIA REMOVALS, THEY SHOULD BE CHECKED ON A MONTHLY BASIS, AND SERVICED OR REPLACED WHEN MORE THAN 2/3 OF THE BOOM IS SUBMERGED, INDICATING A NEARLY SATURATED STATE. ASSUMING A TYPICAL POLLUTANT-LOADING ENVIRONMENT EXISTS, BIO-SKIRTS SHOULD BE SERVICED OR REPLACED ANNUALLY.
H. IN THE CASE OF AN OIL SPILL, THE STRUCTURE SHOULD BE SERVICED/CLEANED AND BIO-SKIRTS REPLACED (IF ANY) IMMEDIATELY.
I. ALL COLLECTED WASTES MUST BE HANDLED AND DISPOSED OF ACCORDING TO LOCAL ENVIRONMENTAL REQUIREMENTS.
J. TO MAINTAIN THE SNOUT HOODS, AN ANNUAL INSPECTION OF THE ANTI-SIPHON VENT AND ACCESS HATCH ARE RECOMMENDED. A SIMPLE FLUSHING OF THE VENT, OR A GENTLE RODDING WITH A FLEXIBLE WIRE ARE ALL THAT'S TYPICALLY NEEDED TO MAINTAIN THE ANTI-SIPHON PROPERTIES. OPENING AND CLOSING THE ACCESS HATCH ONCE A YEAR ENSURES A LIFETIME OF TROUBLE-FREE SERVICE.
K. TO MAINTAIN TRASH SCREEN, HOSE OFF DEBRIS FROM SCREEN (IF ANY) PRIOR TO REMOVAL OF POLLUTANTS BY VACUUM TRUCK.

SNOUT NOTES:

1. ALL HOODS AND TRAPS FOR CATCH BASINS AND WATER QUALITY STRUCTURES SHALL BE AS MANUFACTURED BY:
   BEST MANAGEMENT PRODUCTS, INC.
   53 MT. ARCHER RD.
   LYME, CT 06371
   (860) 434-0277, (860) 434-3195 FAX
   TOLL FREE: (800) 504-8008 OR (888) 434-0277
   WEB SITE: www.bmpinc.com
   OR PRE-APPROVED EQUAL
2. ALL HOODS SHALL BE CONSTRUCTED OF A GLASS REINFORCED RESIN COMPOSITE WITH ISO GEL COAT EXTERIOR FINISH WITH A MINIMUM 0.125" LAMINATE THICKNESS.
3. ALL HOODS SHALL BE EQUIPPED WITH A WATERTIGHT ACCESS PORT, A MOUNTING FLANGE, AND AN ANTI-SIPHON VENT PIPE AND ELBOW AS DRAWN. (SEE CONFIGURATION DETAIL)
4. THE SIZE AND POSITION OF THE HOOD SHALL BE DETERMINED BY OUTLET PIPE SIZE AS PER MANUFACTURER'S RECOMMENDATION (SNOUT SIZE ALWAYS LARGER THAN PIPE SIZE).
5. THE BOTTOM OF THE HOOD SHALL EXTEND DOWNWARD A MINIMUM DISTANCE EQUAL TO 1/2 THE OUTLET PIPE DIAMETER WITH A MINIMUM DISTANCE OF 6" FOR PIPES <12" I.D.
6. THE ANTI-SIPHON VENT SHALL EXTEND ABOVE HOOD BY MINIMUM OF 3" AND A MAXIMUM OF 12" ACCORDING TO STRUCTURE CONFIGURATION.
7. THE SURFACE OF THE STRUCTURE WHERE THE HOOD IS MOUNTED SHALL BE FINISHED SMOOTH AND FREE OF LOOSE MATERIAL AND PIPE SHALL BE FINISHED FLUSH TO WALL.
8. THE HOOD SHALL BE SECURELY ATTACHED TO STRUCTURE WALL WITH 3/8' STAINLESS STEEL BOLTS AND OIL-RESISTANT GASKET AS SUPPLIED BY MANUFACTURER. (SEE INSTALLATION DETAIL)
9. INSTALLATION INSTRUCTIONS SHALL BE FURNISHED WITH MANUFACTURER SUPPLIED INSTALLATION KIT.
   INSTALLATION KIT SHALL INCLUDE:
   A. INSTALLATION INSTRUCTIONS
   B. PVC ANTI-SIPHON VENT PIPE AND ADAPTER
   C. OIL-RESISTANT CRUSHED CELL FOAM GASKET WITH PSA BACKING
   D. 3/8" STAINLESS STEEL BOLTS
   E. ANCHOR SHIELDS

US Patent # 6126817

TYPICAL INSTALLATION

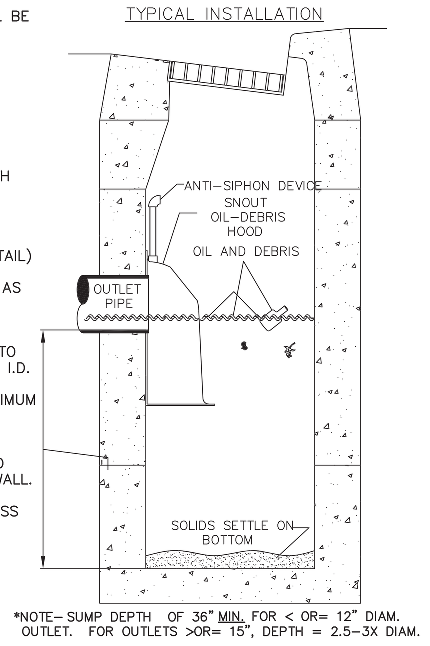

*NOTE- SUMP DEPTH OF 36" MIN. FOR < OR= 12" DIAM. OUTLET. FOR OUTLETS >OR= 15", DEPTH = 2.5-3X DIAM.

INSTALLATION DETAIL

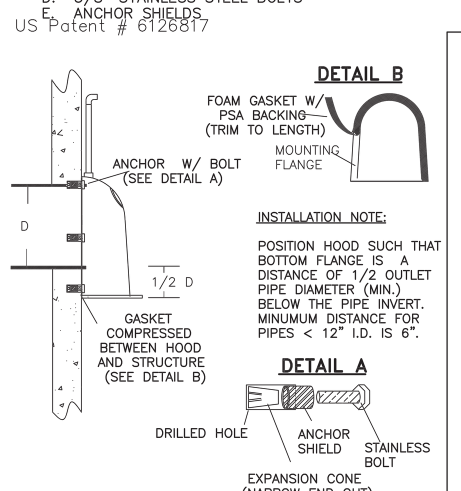

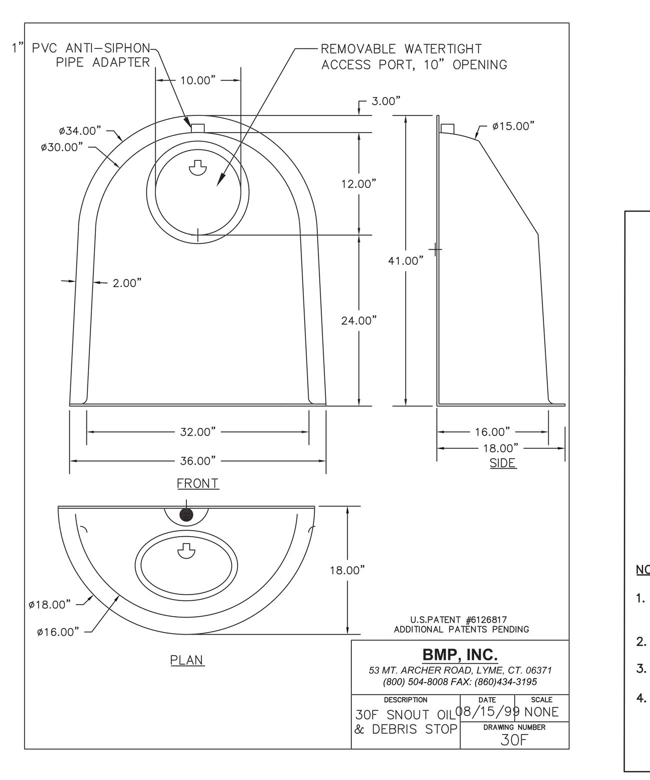

HOOD SPECIFICATION FOR CATCH BASINS AND WATER QUALITY STRUCTURES

DESCRIPTION	DATE	SCALE
OIL- DEBRIS HOOD SPECIFICATION AND INSTALLATION (TYPICAL)	09/08/00	NONE
	DRAWING NUMBER SP-SN	

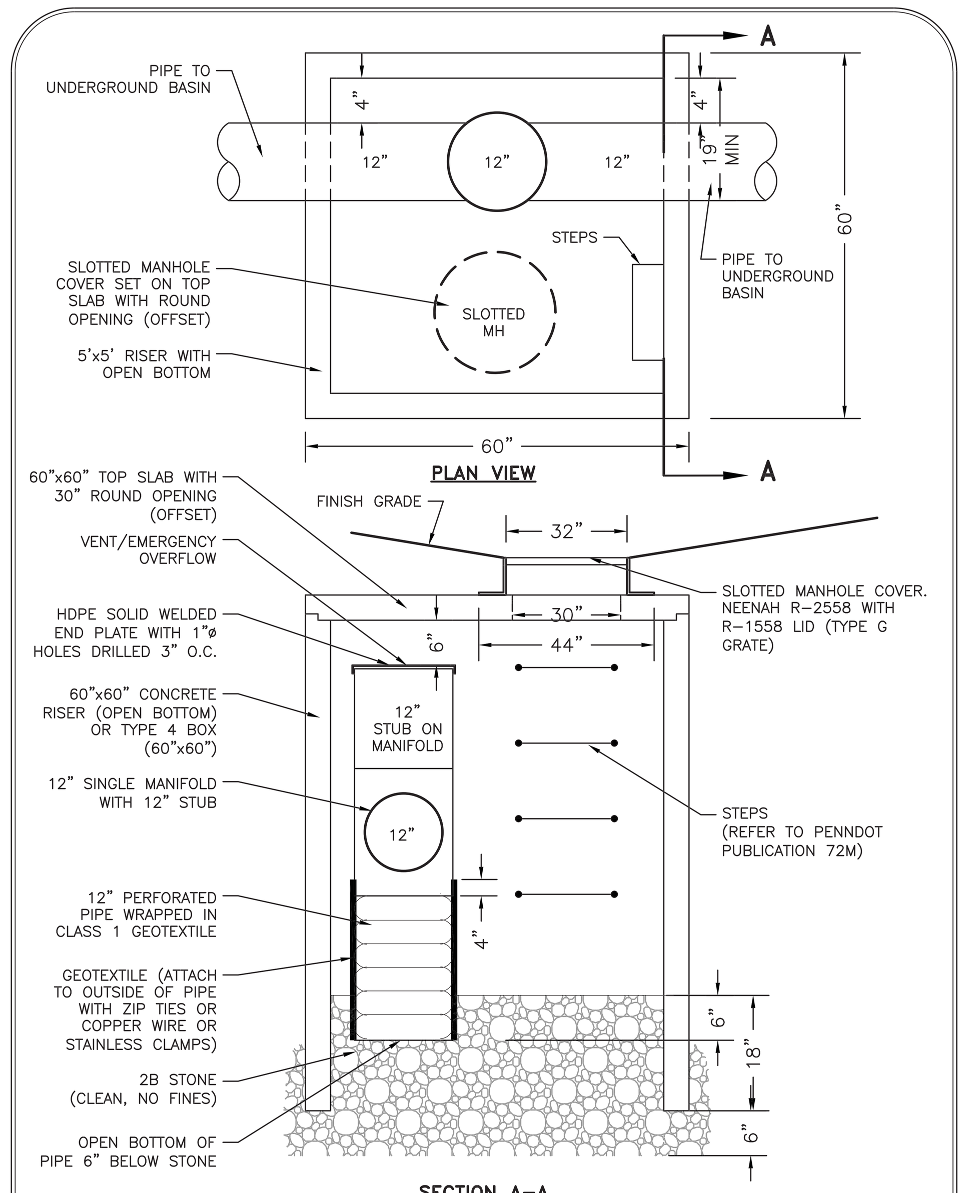

5'x5' FILTER/COLLECTION INLET

N.T.S.

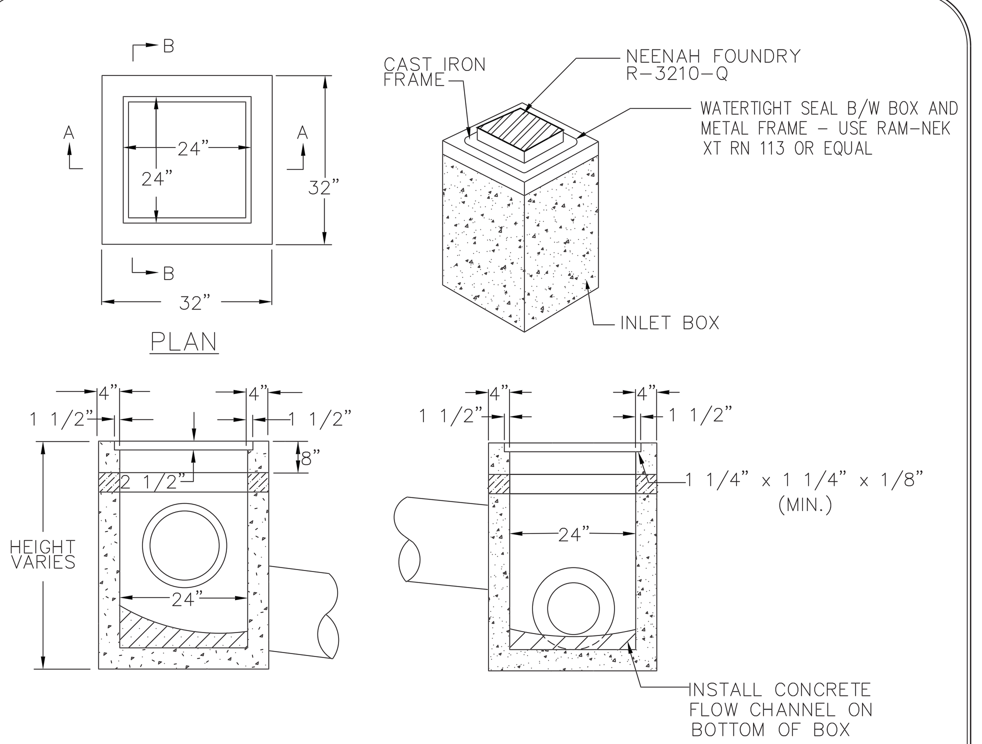

NOTES:
1. EXCEPT WHERE NOTED OTHERWISE, INLETS SHALL BE 2'X2' CONCRETE INLETS.
2. INLETS SHALL BE CONSTRUCTED WITH 4,000 PSI CONCRETE AND CONFORM TO ASTM C913-02 AND PENNDOT HS-25 LOADING STANDARDS.
3. INLET GRATES SHALL BE AS MANUFACTURED BY NEENAH FOUNDRY, MODEL NO. R-3210-Q.
4. CONCRETE FLOW CHANNELS SHALL BE POURED AT BASE OF EACH INLET UPON COMPLETION OF INSTALLATION AND BOX PARGING.
5. INLET AND OUTLET PIPES SHALL BE CUT FLUSH TO THE FACE OF THE BOX AND BOX PARGED FLUSH TO BOX FACE.

2 FT x 2 FT CONCRETE INLET

N.T.S.

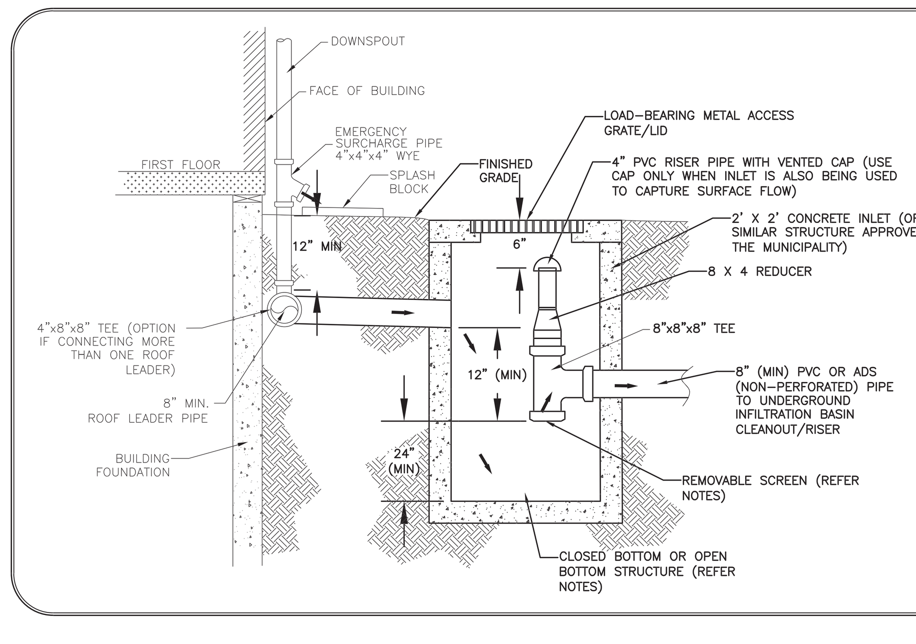

NOTES:
1. FILTER INLET "SCREEN" SHALL BE PVC/CPP LID WITH MULTIPLE HOLES DRILLED TO PERMIT WATER FLOW FREELY TO THE UNDERGROUND BASIN (ALTERNATIVELY, OTHER NON-CORROSIVE SCREENS MAY BE USED IF APPROVED BY THE MUNICIPALITY.....E.G. STAINLESS STEEL, ALUMINUM, ETC).
2. PIPE MAY BE PVC (SCH. 40) OR CORRUGATED POLYETHYLENE PIPE WITH SMOOTH INTERIOR (SOIL/WATER TIGHT EXCEPT WHERE SPECIFIED TO BE PERFORATED, IN WHICH CASE, PIPE MAY BE SOIL-TIGHT, ONLY).
3. FILTER INLET STRUCTURE MAY BE 36" DIAMETER CIRCULAR CONCRETE RISER WITH SOLID CONCRETE LID IF NO SURFACE FLOW IS TO BE COLLECTED BY THE STRUCTURE. CONCRETE RISER BOTTOM MAY BE OPEN IN ACCORDANCE WITH THESE NOTATIONS.
4. INLET STRUCTURE BOTTOM MAY BE CLOSED (AS SHOWN ABOVE) OR OPEN IF SET ON 24 INCHES OF CLEAN STONE.
5. OUTFLOW PIPE MUST BE AT LEAST 12" BELOW INFLOW PIPE.
6. INLET GRATE MUST BE PROTECTED FROM CONTAMINATION AND SILTATION DURING CONSTRUCTION USING CLASS 2 GEOTEXTILE FABRIC (FOR EROSION CONTROL). FILTER FABRIC MAY ONLY BE REMOVED UPON PERMANENT STABILIZATION OF ALL DRAINAGE AREAS TRIBUTARY TO THE INLET.

2' X 2' FILTER INLET DETAIL

(NOT FOR COLLECTION OF SURFACE RUNOFF)

N.T.S.

ON LOT BEDS	Width	Length	Ⓒ Depth	Perf. Pipe Size (Inches)	Total Length of Perf. Pipe (Feet)	Ⓑ Perf. Pipe Elev	Ⓐ Bot of Bed Elev
Lot 1	20.0	45.0	3.5	12.0	90.0	570.5	569.5
Lot 3	30.0	36.0	4.5	12.0	126.0	573.5	572.5
Lot 4/5	1,750 SF **		4.0	12.0	196.0	567.0	566.0
Lot 6/7	33.0	45.0	3.5	12.0	162.0	569.0	568.0
Lot 8/9/10	35.0	60.0	3.0	12.0	196.0	577.0	576.0
Lot 11	17.0	25.0	2.5	12.0	56.0	579.5	578.5

** BASIN FOOTPRINT AND DEPTH, ONLY SHOWN; NON-RECTANGULAR BASIN-REFER DIMENSIONS ON PLAN.

INFILTRATION BED DESIGN TABLE

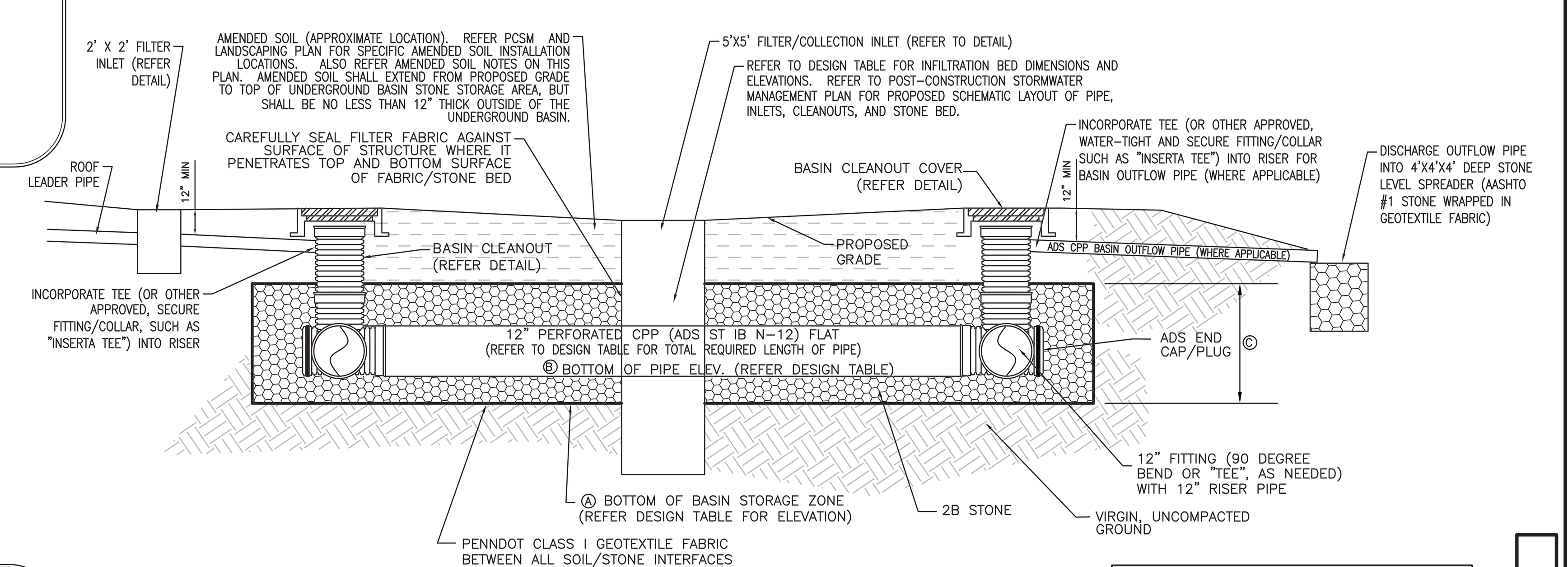

TYPICAL ON LOT INFILTRATION BED DETAIL

N.T.S.

INFILTRATION BASIN CONSTRUCTION NOTE: THE BOTTOM OF ALL INFILTRATION BASINS SHALL BE SCARIFIED PRIOR TO PLACEMENT OF GEOTEXTILE FABRIC AND AGGREGATE.

INFILTRATION BED NOTES

1. REFER TO UTILITY PLAN AND DESIGN TABLE FOR TOP OF GRATE ELEVATIONS ASSOCIATED WITH EACH INFILTRATION BED COLLECTION STRUCTURE.
2. FILTER FABRIC MUST BE CAREFULLY SEALED AGAINST ALL STRUCTURES SURFACES (CLEANOUT RISER, FILTER INLET, INFLOW PIPE OR BASIN OUTLET PIPE) WHERE SUCH STRUCTURES PENETRATE THE STONE BED.
3. SCHEMATIC DESIGN OF PIPE, CLEANOUTS AND FITTINGS IS SHOWN ON THE POST CONSTRUCTION STORMWATER MANAGEMENT PLAN. PRIOR TO COMMENCEMENT OF CONSTRUCTION, A DETAILED SHOP/CONSTRUCTION DRAWING MUST BE PREPARED AND SUBMITTED TO THE TOWNSHIP FOR REVIEW, IDENTIFYING ALL BASIN DIMENSIONS, FITTINGS, AND MATERIALS TO BE USED TO CONSTRUCT THE BASIN.
4. ELEVATION OF MANHOLE FRAME/COVER OF EACH CLEANOUT IS NOT SHOWN AND IS SUBJECT TO CHANGE BASED ON LOT GRADING PLANS PREPARED FOR CONSTRUCTION/DEVELOPMENT OF EACH LOT. CLEANOUT ELEVATIONS SHALL BE DETERMINED AT TIME OF SUBMISSION OF PLOT PLAN FOR CONSTRUCTION OF EACH LOT. GRATE ELEVATION OF SURFACE RUNOFF COLLECTION STRUCTURES (FILTER INLET SLOTTED MANHOLE COVERS) MAY NOT BE REVISED. BASIN CLEANOUTS WITH SLOTTED MANHOLE COVERS ARE NOT INTENDED TO COLLECT SURFACE RUNOFF.
5. ALL HORIZONTAL PIPE SHALL BE 12" DIAMETER, ADS, DUAL WALL, SOIL-TIGHT (ST) PIPE WITH APPROPRIATE FITTING AND COUPLERS.
6. ALL RISER PIPE AND RISER FITTINGS SHALL BE 12" DIAMETER, ADS, DUALL WALL, SOIL-TIGHT (ST).
6. ALL SLOTTED INLET/MANHOLE/CLEANOUT COVERS CONNECTED DIRECTLY OR INDIRECTLY TO THE SEEPAGE BASIN MUST BE PROTECTED FROM CONTAMINATION AND SILTATION DURING CONSTRUCTION USING CLASS 2 GEOTEXTILE FABRIC (FOR EROSION CONTROL). FILTER FABRIC MAY ONLY BE REMOVED FROM STRUCTURES UPON PERMANENT STABILIZATION OF ALL DRAINAGE AREAS TRIBUTARY TO THE SEEPAGE BASIN.

LANDSCAPE RESTORATION NOTE:

1. THE GOAL OF LANDSCAPE RESTORATION IS TO MINIMIZE TRADITIONAL TURF LAWN AREA, MAXIMIZE LANDSCAPE RESTORATION AREA PLANTED WITH NATIVE VEGETATION, PROTECT LANDSCAPE RESTORATION AREA DURING CONSTRUCTION, PREVENT POST CONSTRUCTION EROSION THROUGH ADEQUATE STABILIZATION, MINIMIZE FERTILIZER AND CHEMICAL BASED PEST CONTROL, CREATE AND MAINTAIN POROUS SURFACE AND HEALTHY SOIL.

LANDSCAPE CONSTRUCTION SEQUENCE & MAINTENANCE NOTE:

1. PREPARE SITE BY ELIMINATING ALL WEEDS OR VEGETATION PRIOR TO SEEDING.
2. PLANTING SHALL TAKE PLACE FROM SPRING THAW THROUGH JUNE 30 OF FROM SEPTEMBER 1 THROUGH SOIL FREEZE-UP (DORMANT SEEDING).
3. SEASONAL MOWING MAY BE REQUIRED. CARE MUST BE TAKEN TO MAKE SURE THAT ANY MANAGEMENT IS COORDINATED WITH ESSENTIAL RESEEDING AND OTHER IMPORTANT ASPECTS OF MEADOW REESTABLISHMENT.
4. IN THE FIRST YEAR, WEEDS MUST BE CAREFULLY CONTROLLED AND CONSISTENTLY MOVED BACK TO 4-6 INCHES TALL WHEN THEY REACH 12 INCHES IN HEIGHTS.
5. IN THE SECOND YEAR, WEEDS SHOULD BE CONTINUED TO BE MONITORED AND MOWED, AND IF NEEDED, HAND TREATED WITH HERBICIDE. WEEDS SHOULD NOT BE SPRAYED WITH HERBICIDE AS THE DRIFT FROM THE SPRAY MAY KILL LARGE PATCHES OF DESIRABLE PLANTS, ALLOWING WEEDS TO MOVE INTO THESE AREAS.

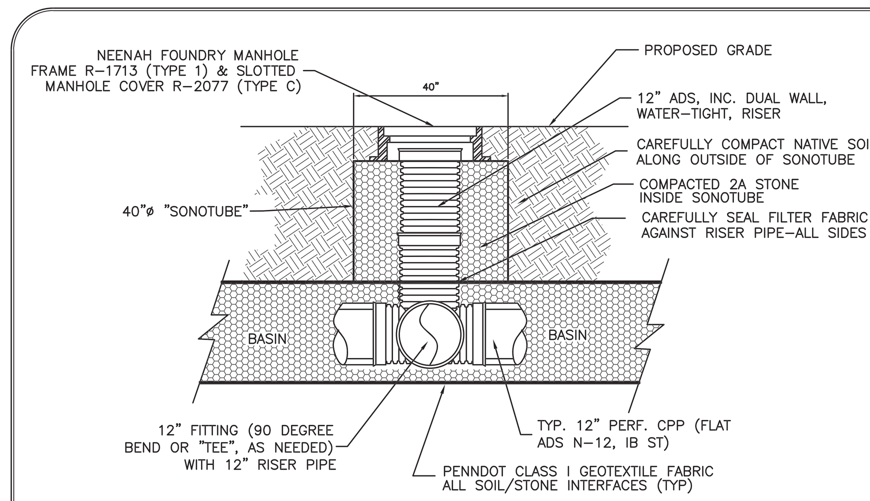

INFILTRATION BASIN CLEANOUT DETAIL

N.T.S.

INFILTRATION BASIN CLEANOUT NOTES:
1. FILTER FABRIC MUST BE CAREFULLY SEALED AGAINST CLEANOUT RISER, PIPES, AND STRUCTURES WHERE THEY PENETRATE THE STONE BED.
2. ELEVATION OF PROPOSED MANHOLE FRAME/COVER OF EACH CLEANOUT SHALL BE SET TO MATCH EXISTING GRADE (OR PROPOSED GRADE WHERE ALTERATION OF SURFACE GRADE IS SHOWN OVER THE BASIN) AT THE LOCATION OF THE CLEANOUT AS SHOWN ON THE GRADING PLAN.
3. ALL HORIZONTAL PIPE SHALL BE 12" DIAMETER, ADS, DUAL WALL, SOIL-TIGHT (ST) PIPE WITH APPROPRIATE FITTING AND COUPLERS.
4. ALL RISER PIPE AND RISER FITTINGS SHALL BE 12" DIAMETER, ADS, DUAL WALL, SOIL-TIGHT (ST).
5. ALL SLOTTED GRATES ON CLEANOUTS/INLETS MUST BE SEALED USING CLASS 2 GEOTEXTILE FABRIC (FOR EROSION CONTROL) DURING CONSTRUCTION AND MAY ONLY BE REMOVED UPON PERMANENT STABILIZATION OF ALL DRAINAGE AREAS TRIBUTARY TO THE SEEPAGE BED.

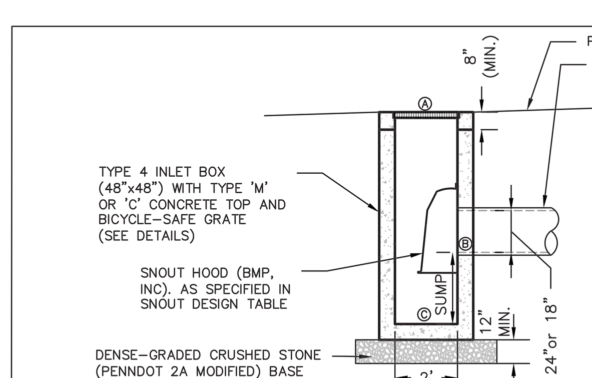

SNOUT INLET DESIGN TABLE

STORM STRUCTURE	INFILTRATION BED	Ⓐ	Ⓑ	Ⓒ	SNOUT MODEL#
INL #108	MAIN BED	576.88	569.78	564.15	30F
INL #303	MAIN BED	573.50	569.58	565.41	30F

NOTES
1. ELEVATION "C" IDENTIFIED IN THE SNOUT DESIGN TABLE IS BASED UPON THE SUMP DEPTH OF 67.5" (5.63') AS REQUIRED BY THE MANUFACTURER FOR 24" PIPE, AND 50" (4.17') FOR 18" PIPE, AND REPRESENTS THE BOTTOM OF INLET BOX ELEVATION.
2. ALL SNOUTS SHALL ONLY BE FITTED ON 4' X 4' PENNDOT TYPE 4 INLET BOXES WITH APPROPRIATE HOOD AND BICYCLE SAFE GRATE.
3. INLET BOXES FITTED WITH A SNOUT MUST HAVE ACCESS STEPS CONSISTENT WITH PENNDOT REQUIREMENTS IDENTIFIED IN PUBLICATION 408 AND 72M.
4. INLET BOXES FITTED WITH A SNOUT MUST BE CLEANED AND MAINTAINED IN ACCORDANCE WITH MANUFACTURER'S RECOMMENDATIONS AS IDENTIFIED ON THIS PLAN SHEET.

TYPICAL WATER QUALITY STRUCTURE (SNOUT) DETAIL

N.T.S.

Rain Garden Mix

ERNMX#	ERNMX-180
Seeding Rate	20 lb per acre with a cover crop of grain rye at 30 lb per acre
Mix Type	Upland & Meadow Sites

Species List (click for details)
- 38% River Oats, PA/VA Ecotype blend (Chasmanthium latifolium (Uniola latifolia), PA/VA Ecotype blend)
- 19% Virginia Wildrye, PA Ecotype (Elymus virginicus, PA Ecotype)
- 12% Redtop Panicgrass, Coastal Plain NC Ecotype (Panicum rigidulum (P. stipitatum), Coastal Plain NC Ecotype)
- 5% Purple Coneflower (Echinacea purpurea)
- 4% Lanceleaf Coreopsis, Coastal Plain NC Ecotype (Coreopsis lanceolata, Coastal Plain NC Ecotype)
- 3% Blackeyed Susan, Coastal Plain NC Ecotype (Rudbeckia hirta, Coastal Plain NC Ecotype)
- 3% Ohio Spiderwort, PA Ecotype (Tradescantia ohiensis, PA Ecotype)
- 3% Smooth Blue Aster, NY Ecotype (Aster laevis (Symphyotrichum laeve), NY Ecotype)
- 2% Marsh (Dense) Blazing Star (Spiked Gayfeather), PA Ecotype (Liatris spicata, PA Ecotype)
- 2% Partridge Pea, PA Ecotype (Chamaecrista fasciculata (Cassia f.), PA Ecotype)
- 2% Oxeye Sunflower, PA Ecotype (Heliopsis helianthoides, PA Ecotype)
- 2% Autumn Bentgrass, PA Ecotype (Agrostis perennans, PA Ecotype)
- 1% Blue False Indigo, Southern WV Ecotype (Baptisia australis, Southern WV Ecotype)
- 1% Swamp Milkweed, PA Ecotype (Asclepias incarnata, PA Ecotype)
- 1% Wild Senna, VA & WV Ecotype (Senna hebecarpa (Cassia h.), VA & WV Ecotype)
- 1% Early Goldenrod, VA Ecotype (Solidago juncea, VA Ecotype)
- 0.8% Wild Bergamot, PA Ecotype (Monarda fistulosa, PA Ecotype)
- 0.2% Slender Mountainmint (Pycnanthemum tenuifolium)

SEEDING AND REVEGETATION NOTES:
1. THIS MEADOW GROUND COVER SHALL BE ESTABLISHED OVER ALL SURFACE AREAS SHOWN ON THE POST-CONSTRUCTION STORMWATER MANAGEMENT PLAN. TOPSOIL IN THESE AREAS SHALL BE SCARIFIED TO A DEPTH OF 8 INCHES PRIOR TO PLACING SEED.
2. MIX ERNST SEED INTO UPPER 3 INCHES OF TOPSOIL USING A ROTARY TILLER, TO PREVENT FLOATING SEED. INSTALL TENSAR NORTH AMERICAN GREEN EROSION CONTROL BLANKET AS SHOWN ON THE EROSION AND SEDIMENT CONTROL PLAN. ERNST SEED MUST BE APPLIED AT THE DESIGNATED RATE AS MANY TIMES AS IS NEEDED TO ESTABLISH THE INTENDED WET-TOLERANT GROUND COVER.
3. EROSION CONTROL BLANKET OVER AREAS TO BE SEEDED SHALL ONLY BE INSTALLED WHERE SHOWN ON THE EROSION AND SEDIMENTATION CONTROL PLAN.

VEGETATED MEADOW AREAS SEED MIXTURE

N.T.S.

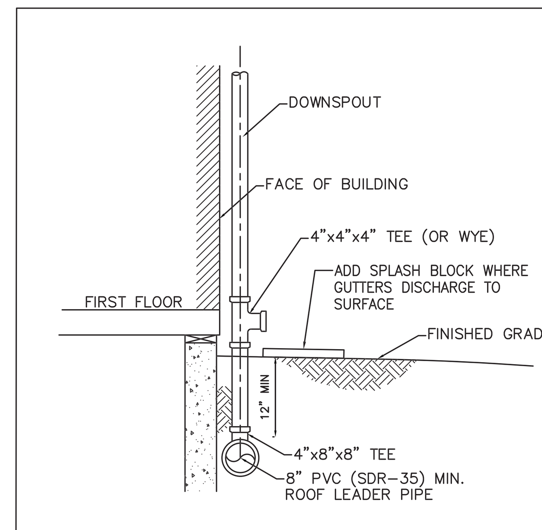

DOWNSPOUT TO ROOF LEADER PIPE DETAIL

N.T.S.

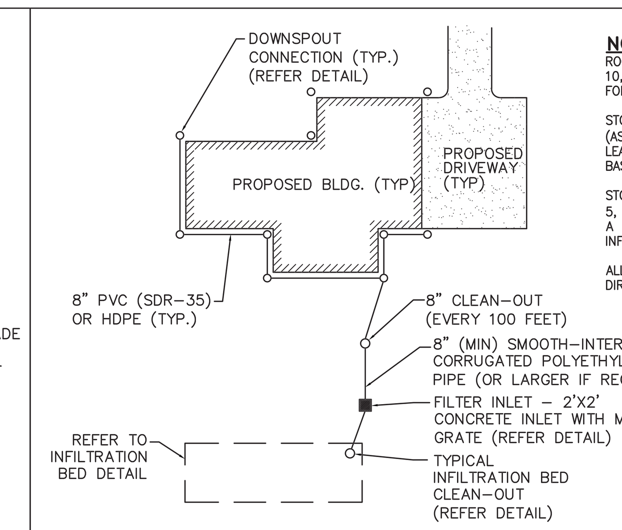

SCHEMATIC ROOF LEADER SYSTEM DETAIL

N.T.S.

NOTE:
ROOF TOP DISCONNECT CREDIT WAS TAKEN FOR LOTS 1, 4, 8, 9, 10, 11, 12, 13 14 AND PARTIAL ROOF TOP DISCONNECT CREDIT FOR LOT 6.

STORMWATER RUNOFF FROM PORTIONS OF ROOF AREA FOR LOT 6 (AS INDICATED ON THIS PLAN) MUST BE CONVEYED VIA A ROOF LEADER COLLECTION SYSTEM TO THE UNDERGROUND INFILTRATION BASIN.

STORMWATER RUNOFF FROM THE ENTIRE ROOF AREA OF LOTS 3, 5, AND 7 (AS INDICATED ON THIS PLAN) MUST BE CONVEYED VIA A ROOF LEADER COLLECTION SYSTEM TO THE UNDERGROUND INFILTRATION BASIN.

ALL ROOF RUNOFF HAS BEEN ACCOUNTED FOR AND WILL BE DIRECTED TO EITHER INDIVIDUAL ON LOT BEDS OR THE MAIN BED.

NPDES PERMIT

RECORDING PLAN SHEET 5 OF 6

ORIGINAL PLANS BEAR A REGISTRATION SEAL IN RED INK.

ERIC J. JANETKA, REGISTERED PROFESSIONAL ENGINEER No. 050549-E, COMMONWEALTH OF PENNSYLVANIA

KELLY & CLOSE ENGINEERS
CONSULTING ENGINEERS & SURVEYORS
The Summit at Brandywine
1786 Wilmington Pike/Suite 300
Glen Mills, Pennsylvania 19342
610.358.9363 fax 610.358.9376

REV.	DATE	DESCRIPTION	BY
3	2/8/2019	REVISE PLAN PER TOWNSHIP CONSULTANT REVIEWS, NPDES PERMIT REVIEW	E.J.J.
2	10/5/2018	REVISED GRADING; REVISED SANITARY SEWER DESIGN; REVISED SWM	E.J.J.
1	9/10/2014	REVISED PER TWP 8-11-14 AND 8-18-14 REVIEW LETTERS	E.J.J.

date:	7/21/2014
scale:	AS NOTED
drawn by:	M.J.B.
checked by:	E.J.J.
dwg. name:	F-Dtls-PCSM.dwg
project no.:	N/A

SHIRTZ FARM

110 SPROUL ROAD
EAST WHITELAND TOWNSHIP
CHESTER COUNTY, PENNSYLVANIA

POST-CONSTRUCTION STORMWATER MANAGEMENT DETAILS (3 OF 3)

This document and all information and work product represented by and contained herein, is the sole and exclusive property of James C. Kelly & Associates, Inc., t/a Kelly & Close Engineers. The information contained herein is licensed only for limited use by the intended recipient, and no license, permission or authority is extended, directly or implied, to any party without express written permission of James C. Kelly & Associates, Inc.

Copyright, 2015, James C. Kelly & Associates, Inc. All rights reserved

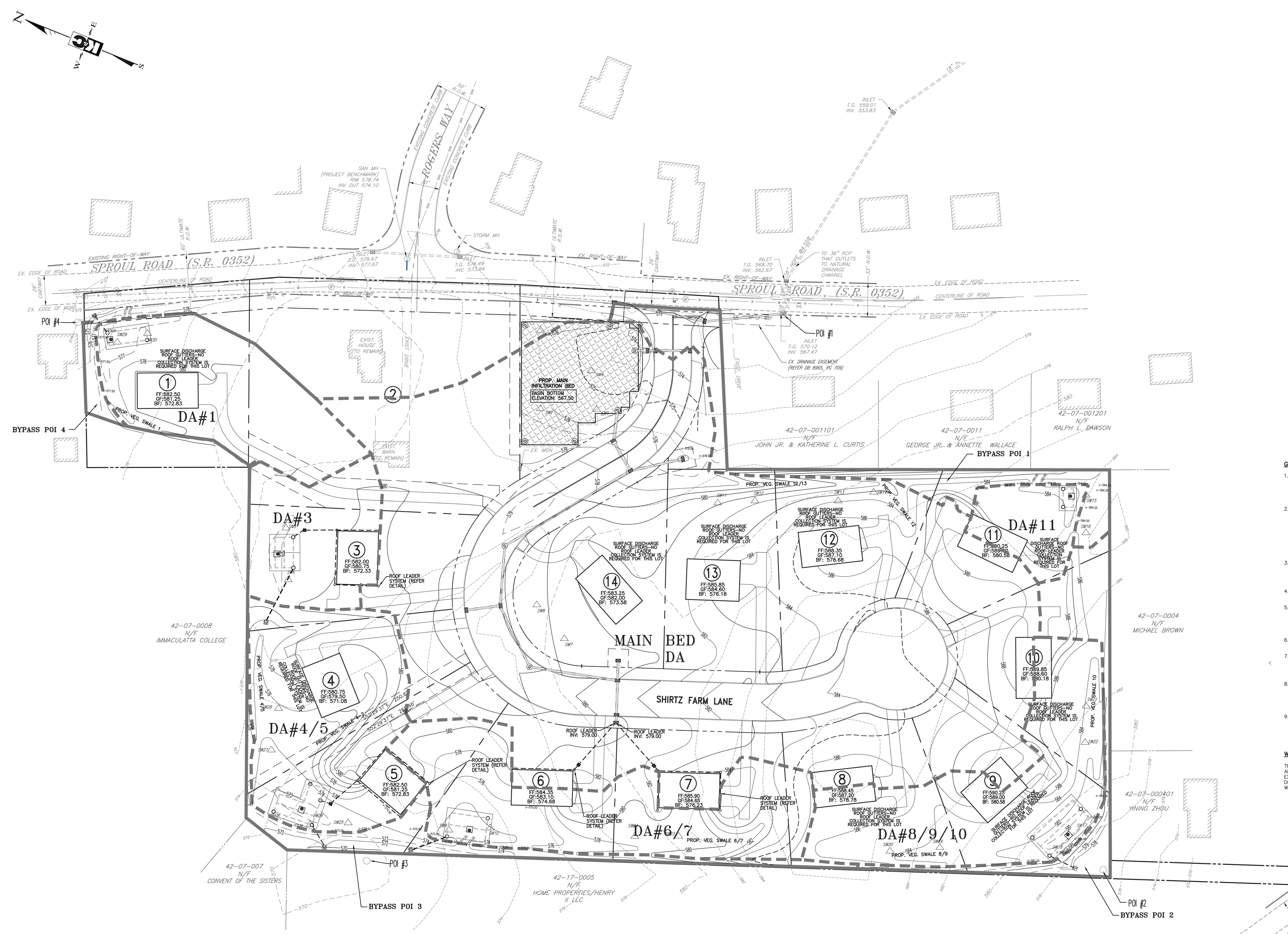

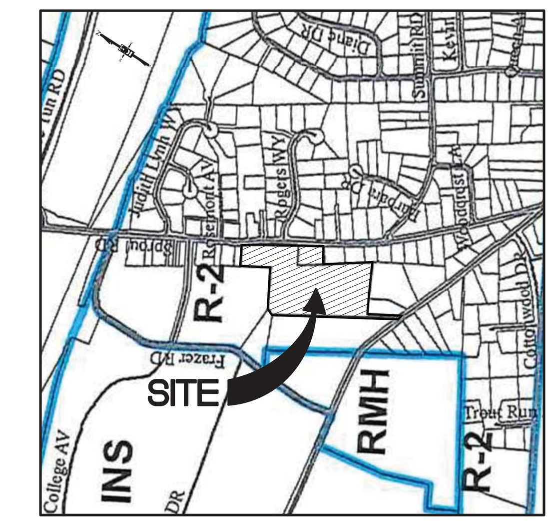

LOCATION MAP
SCALE: 1"=1000'

WATERSHED NOTES:

1. THIS PROJECT IS WITHIN A SPECIALLY PROTECTED HIGH QUALITY WATERSHED, EXTREME CARE SHOULD BE EXERCISED IN ALL DISTURBANCE ACTIVITIES TO PREVENT DEGRADATION TO THE WATER OF THE COMMONWEALTH.
2. RUNOFF FROM THIS SITE WILL ENTER THE RIDLEY CREEK AND VALLEY CREEK WHICH ARE IDENTIFIED BY PA CODE TITLE 25 CHAPTER 93 AS EV, MF (VALLEY CREEK) AND HQ, TSF (RIDLEY CREEK) STREAMS.

EV EXCEPTIONAL VALUE WATERS: – A SURFACE WATER THAT MEETS ONE OR MORE OF THE FOLLOWING CONDITIONS IS AN EXCEPTIONAL VALUE WATER:

(1) THE WATER MEETS THE REQUIREMENTS OF SUBSECTION (A) AND ONE OR MORE OF THE FOLLOWING:

(i) THE WATER IS LOCATED IN A NATIONAL WILDLIFE REFUGE OR A STATE GAME PROPAGATION AND PROTECTION AREA.

(ii) THE WATER IS LOCATED IN A DESIGNATED STATE PARK NATURAL AREA OR STATE FOREST NATURAL AREA, NATIONAL NATURAL LANDMARK, FEDERAL OR STATE WILD RIVER, FEDERAL WILDERNESS AREA OR NATIONAL RECREATIONAL AREA.

(iii) THE WATER IS AN OUTSTANDING NATIONAL, STATE, REGIONAL OR LOCAL RESOURCE WATER.

(iv) THE WATER IS SURFACE WATER OF EXCEPTIONAL RECREATIONAL SIGNIFICANCE.

(v) THE WATER ACHIEVES A SCORE OF AT LEAST 92% (OR ITS EQUIVALENT) USING THE METHODS AND PROCEDURES DESCRIBED IN SUBSECTION (a)(2)(i)(A) OR (B).

(vi) THE WATER IS DESIGNATED AS A "WILDERNESS TROUT STREAM" BY THE FISH AND BOAT COMMISSION FOLLOWING PUBLIC NOTICE AND COMMENT.

(2) THE WATER IS A SURFACE WATER OF EXCEPTIONAL ECOLOGICAL SIGNIFICANCE.

HQ HIGH QUALITY WATERS – A STREAM OR WATERSHED WHICH HAS EXCELLENT QUALITY WATERS AND ENVIRONMENTAL OR OTHER FEATURES REQUIRE SPECIAL WATER QUALITY PROTECTION.

TSF TROUT STOCKING – MAINTENANCE OF STOCK TROUT FROM FEBRUARY 15 TO JULY 31 AND MAINTENANCE AND PROPAGATION OF FISH SPECIES AND ADDITIONAL FLORA AND FAUNA WHICH ARE INDIGENOUS TO A WARM WATER HABITAT.

MF MIGRATORY FISHES – PASSAGE MAINTENANCE AND PROPAGATION OF ANADROMOUS AND CATADROMOUS FISHES AND OTHER FISHES WHICH ASCEND TO FLOWING WATERS TO COMPLETE THEIR LIFE CYCLE.

3. BECAUSE THIS PROJECT IS WITHIN SPECIALLY PROTECTED HIGH QUALITY WATERSHEDS, ALL AREAS REQUIRING INTERIM OR FINAL STABILIZATION MUST BE ADDRESSED WITHIN 72 HOURS OF COMPLETION OF DISTURBANCE.
4. TEMPORARY AND PERMANENT CHANNELS WITH DESIGN STORM VELOCITIES GREATER THAN 3.0 FPS UTILIZE GEOTEXTILE LININGS.

GENERAL NOTES

1. THE AREAS OF THE PROPOSED SEEPAGE BEDS SHALL BE PROTECTED WITH TREE PROTECTION FENCING DURING SITE CONSTRUCTION. THESE AREAS ARE TO BE CLEARLY MARKED WITH STAKES AND CONSTRUCTION FENCING AND CONSTRUCTION RUNOFF IS TO BE DIRECTED AWAY FROM THEM. ALL TREES WITHIN THESE AREAS MUST BE REMOVED BY HAND.
2. AN OPERATION AND MAINTENANCE (O&M) AGREEMENT MUST BE COMPLETE FOR EACH PRIVATELY OWNED INFILTRATION AND COLLECTION SYSTEM. UPON COMPLETION, THE O&M AGREEMENT MUST BE SIGNED AND FILED WITH THE OFFICE OF RECORDER OF DEEDS. EACH PROPERTY OWNER MUST MAINTAIN AND PRESERVE THE FULL EFFECTIVENESS OF THE STORMWATER MANAGEMENT FACILITY IN PERPETUITY AND IS NOT PERMITTED TO DAMAGE, ALTER OR REMOVE THE FACILITY. THE STORMWATER MANAGEMENT FACILITY SHALL REMAIN IN PLACE AND FUNCTION FOR THE DURATION OF THE PROPERTY USE. OWNER SHALL INSPECT FACILITIES ON A PERIODIC BASIS AND IMPLEMENT MAINTENANCE AS NECESSARY.
3. STORMWATER SEEPAGE BEDS SHALL BE FILLED WITH CLEAN STONE MEETING THE REQUIREMENTS OF FORM 408, SECTION 703 FOR 2B STONE (OR AASHTO NO. 4 STONE OVER 6" OF 2B STONE). THE STONE SHALL BE WRAPPED IN GEOTEXTILE MEETING THE REQUIREMENTS OF PENNDOT PUBLICATION 408, SECTION 735.2, TABLE A FOR CLASS I.
4. ALL INLET BOXES AND STORM MANHOLES SHALL MEET THE REQUIREMENTS OF FORM 408, SECTION 605.
5. COMPACTION OF THE INFILTRATION BOTTOM SURFACE MUST BE AVOIDED. THE CONTRACTOR MUST USE LIGHTWEIGHT CONSTRUCTION EQUIPMENT AND OPERATE MACHINERY FROM OUTSIDE THE INFILTRATION FACILITY PERIMETER AT ALL TIMES. IF APPROVED BY THE TOWNSHIP, EQUIPMENT MAY ENTER THE INFILTRATION BASIN AREA OVER TIMBER MATTING TO PREVENT COMPACTION.
6. REFER TO THE POST CONSTRUCTION STORMWATER MANAGEMENT PLAN AND DETAILS FOR INFILTRATION BED DETAILS.
7. CONTRACTOR SHALL BE RESPONSIBLE FOR ALL OPERATION AND MAINTENANCE FOR ALL EROSION AND SEDIMENT CONTROLS. THE CONTRACTOR WILL BE RESPONSIBLE FOR REPAIR, CLEANING OR REPLACEMENT OF ANY INLETS DAMAGED OR AFFECTED AS A RESULT OF SITE CONSTRUCTION AND/OR FAULTY EROSION AND SEDIMENT CONTROL MAINTENANCE.
8. DURING THE LIFE OF THE PROJECT, ALL EROSION AND SEDIMENTATION CONTROLS DEVISED MUST BE PROPERLY MAINTAINED. MAINTENANCE SHALL INCLUDE THE INSPECTION OF EROSION CONTROL FACILITIES AFTER EACH STORM EVENT AND ON A WEEKLY BASIS. IMMEDIATELY PERFORM CLEANOUT REPAIR AND REPLACEMENT OF THE FACILITIES AS NEEDED. REGRADE, RESEED AND MULCH WASHED OUT AREAS AS THEY OCCUR.
9. SEEDED AREAS THAT HAVE WASHED AWAY SHALL BE FILLED AND GRADED, AS NECESSARY AND THEN RESEEDED. A STRAW COVER SHALL BE APPLIED TO RETAIN THE SEED. STRAW MULCH SHALL BE PLACED AT A RATE OF 3 TONS PER ACRE. EROSION CONTROL MATTING/FABRIC SHALL BE USED TO STABILIZE AREAS THAT HAVE WASHED AWAY MORE THAN TWICE.

WATERSHED NOTE:

THIS PROJECT IS LOCATED IN THE RIDLEY AND VALLEY CREEK WATERSHEDS, WHICH IS CLASSIFIED ARE CLASSIFIED AS HQ AND EV STREAMS BY PA CHAPTER 93. EXTREME CARE SHOULD BE EXERCISED IN ALL DISTURBANCE ACTIVITIES TO PREVENT DEGRADATION TO THESE CREEKS. ALL DISTURBED AREA ON WHICH WORK HAS BEEN OR WILL BE STOPPED MUST BE PROMPTLY STABILIZED WITH APPROPRIATE TEMPORARY OR PERMANENT STABILIZATION MEASURES.

POST DEVELOPED = 8.19 ACRES
TOTAL BYPASS = 0.93 ACRES
TOTAL POST DEVELOPED DRAINAGE AREA = 9.12 ACRES

On Lot Impervious Cover Chart

Lot No.	House and Driveway	Miscellaneous	Total Impervious Cover
Lot 1	5,900	750	6,650
Lot 3	3,780	750	4,530
Lot 4	4,205	750	4,955
Lot 5	4,160	750	4,910
Lot 6	3,505	750	4,255
Lo7 7	5,280	750	6,030
Lot 8	3,495	750	4,245
Lot 9	3,895	750	4,645
Lot 10	3,675	750	4,425
Lot 11	3,660	750	4,410
Lot 12	3,720	750	4,470
Lot 13	3,718	750	4,468
Lot 14	3,360	750	4,110

Lot #2 is an existing lot proposed to remain. No improvements are proposed for existing Lot 2. Pool water surface is considered impervious surface. Wood deck (with no impervious surface below) is considered a pervious surface.

NOTE: ROOF TOP DISCONNECT CREDIT WAS TAKEN FOR LOTS 1, 4, 8, 9, 10, 11, 12, 13 14 AND PARTIAL ROOF TOP DISCONNECT CREDIT FOR LOTS 6. STORMWATER ROOF RUNOFF FOR LOTS 3, 5 AND 7 MUST BE CONVEYED VIA A ROOF LEADER COLLECTION SYSTEM TO THE UNDERGROUND INFILTRATION BASIN. THE ROOF LEADER SYSTEM SHOWN IS SCHEMATIC. REFER TO ROOF LEADER SYSTEM DETAIL FOR CONSTRUCTION SPECIFICATIONS. ALL ROOF RUNOFF HAS BEEN ACCOUNTED FOR AND WILL BE DIRECTED TO EITHER INDIVIDUAL ON LOT BEDS OR THE MAIN BED.

NOTE: THE ON-LOT VEGETATIVE SWALES HAVE THE SAME DRAINAGE AREA AS THE ON-LOT INFILTRATION FACILITY DRAINAGE AREAS ASSOCIATED WITH EACH LOT.

PROJECT SERIAL No. : 20182490802

BEFORE YOU DIG ANYWHERE IN... PENNSYLVANIA

STOP! CALL 1-800-242-1776 (TOLL FREE)

PA LAW REQUIRES 3 WORKING DAYS NOTICE FOR CONSTRUCTION PHASE AND 10 WORKING DAYS NOTICE IN DESIGN STAGE PENNSYLVANIA ONE CALL SYSTEM, Inc.

ALL TRENCHING, SHEETING AND SHORING SHALL BE IN STRICT ACCORDANCE WITH OSHA STANDARDS.

ACT NUMBER 287 OF 1974 as AMENDED UTILITY USER LIST

AQUA PENNSYLVANIA, INC.
700 W. SPROUL ROAD
SPRINGFIELD, PA 19064
CONTACT: JOSEPH M. CILIBERTI
PHONE: (484) 470-1075

COMCAST CABLE COMM., INC.
110 SPRINGBROOKE BLVD.
ASTON, PA 19014
CONTACT: DAN CLARK
PHONE: (877) 537-8411

EAST WHITELAND TOWNSHIP
209 CONESTOGA ROAD
MALVERN, PA 19355
CONTACT: TERRY H. WOODMAN
PHONE: (610) 648-0600

PECO ENERGY
3628 HORIZON DRIVE, DELONFILE
KING OF PRUSSIA, PA 19406
CONTACT: SUSAN TERREY
PHONE: (215) 956-3182

VALLEY FORGE SEWER AUTHORITY
333 PAWLING ROAD
PHOENIXVILLE, PA 19460
CONTACT: STEPHEN YUHAS
PHONE: (610) 983-9684

VERIZON PENNSYLVANIA, INC.
900 RACE STREET, 6TH FLOOR
PHILADELPHIA, PA 19107
CONTACT: JOSEPH SCELSA
PHONE: (610) 280-5586

SOILS LEGEND AND TABLE OF LIMITATIONS & RESOLUTIONS BASED ON U.S.D.A. – N.R.C.S. SOILS SURVEY OF CHESTER COUNTY (CURRENT VERSION)

SYMBOL	MAPPING UNITS	SLOPE	LAND CAPABILITY	HYDRIC SOIL	HYDROLOGIC GROUP	DEPTH TO BEDROCK	DEPTH TO WATER TABLE	LIMITATIONS FOR SITE DEVELOPMENT: DWELLINGS WITH BASEMENTS	RISK OF FROST ACTION	RISK OF EROSION BY WATER (K FACTOR[1])	RISK OF CORROSION: STEEL	RISK OF CORROSION: CONCRETE	DWELLINGS WITHOUT BASEMENTS	LOCAL ROADS AND STREETS	SHALLOW EXCAVATIONS	EMBANKMENTS	LAWNS & LANDSCAPING	ROAD FILL SOURCE	TOPSOIL SOURCE
GgB	GLENELG SILT LOAM	3–8%	2E	NO	B	> 80 in.	> 80 in.	NOT LIMITED	MODERATE	0.37	LOW	MODERATE	NOT LIMITED	VERY LIMITED 3,4	SOMEWHAT LIMITED	SOMEWHAT LIMITED	SOMEWHAT LIMITED	POOR 3	FAIR 9
MaB	MANOR LOAM	3–8%	2E	NO	B	72–99 in.	> 80 in.	NOT LIMITED	MODERATE	0.28	MODERATE	HIGH	NOT LIMITED	VERY LIMITED 3,4	SOMEWHAT LIMITED	VERY LIMITED	SOMEWHAT LIMITED	POOR 3	POOR 10
MaC	MANOR LOAM	8–15%	3E	NO	B	59–100 in.	> 80 in.	SOMEWHAT LIMITED	MODERATE	0.28	MODERATE	HIGH	SOMEWHAT LIMITED	SOMEWHAT LIMITED 3,4	SOMEWHAT LIMITED	VERY LIMITED	SOMEWHAT LIMITED	POOR 3	FAIR 9,10

REASONS FOR LIMITATIONS: 1 – SHRINK-SWELL 2 – SLOPE 3 – LOW STRENGTH 4 – FROST ACTION 5 – CUTBANKS CAVE 6 – PIPING 7 – GRAVEL CONTENT 8 – LARGE STONES CONTENT 9 – ROCK FRAGMENTS 10 – HARD TO RECLAIM (ROCK FRAGMENTS) 11 – DEPTH TO SATURATED ZONE

FOOTNOTES:
1. K FACTOR – ≤0.37=EROSION RESISTANT; >0.37=EASILIY ERODED. CLASSIFICATIONS IDENTIFIED IN DEP E&SPC MANUAL, MARCH 2012.

APPLICANT/EQUITABLE OWNER:
WOODSTONE DEVELOPMENT COMPANY, LP
70 POTTSTOWN PIKE, SUITE 100
CHESTER SPRINGS, PA 19425

SITE ADDRESS:
110 SPROUL ROAD
MALVERN, PA 19355

GRAPHIC SCALE
(IN FEET)
1 inch = 40 ft.

ORIGINAL PLANS BEAR A REGISTRATION SEAL IN RED INK.

ERIC J. JANETKA
REGISTERED PROFESSIONAL ENGINEER No. 050549-E
COMMONWEALTH OF PENNSYLVANIA

KELLY & CLOSE ENGINEERS
CONSULTING ENGINEERS & SURVEYORS
The Summit at Brandywine
1786 Wilmington Pike/Suite 300
Glen Mills, Pennsylvania 19342
610.358.9363 fax 610.358.9376

REV.	DATE	DESCRIPTION	BY
3	2/8/2019	REVISE PLAN PER TOWNSHIP CONSULTANT REVIEWS, NPDES PERMIT REVIEW	E.J.J.
2	10/5/2018	REVISED GRADING; REVISED SANITARY SEWER DESIGN; REVISED SWM	E.J.J.
1	9/10/2014	REVISED PER TWP 8-11-14 AND 8-18-14 REVIEW LETTERS	E.J.J.

date: 7/21/2014
scale: 1" = 40'
drawn by: M.J.B.
checked by: E.J.J.
dwg. name: F-BMP-DA.dwg
project no.: N/A

SHIRTZ FARM
110 SPROUL ROAD
EAST WHITELAND TOWNSHIP
CHESTER COUNTY, PENNSYLVANIA

NPDES PERMIT – EROSION AND SEDIMENT CONTROL

POST-DEVELOPMENT DRAINAGE AREA PLAN

This document and all information and work product represented by and contained herein, is the sole and exclusive property of James C. Kelly & Associates, Inc., t/a Kelly & Close Engineers. The information contained herein is licensed only for limited use by the intended recipient, and no license, permission or authority is extended, directly or implied, to any party without express written permission of James C. Kelly & Associates, Inc.

Copyright, 2015, James C. Kelly & Associates, Inc. All rights reserved

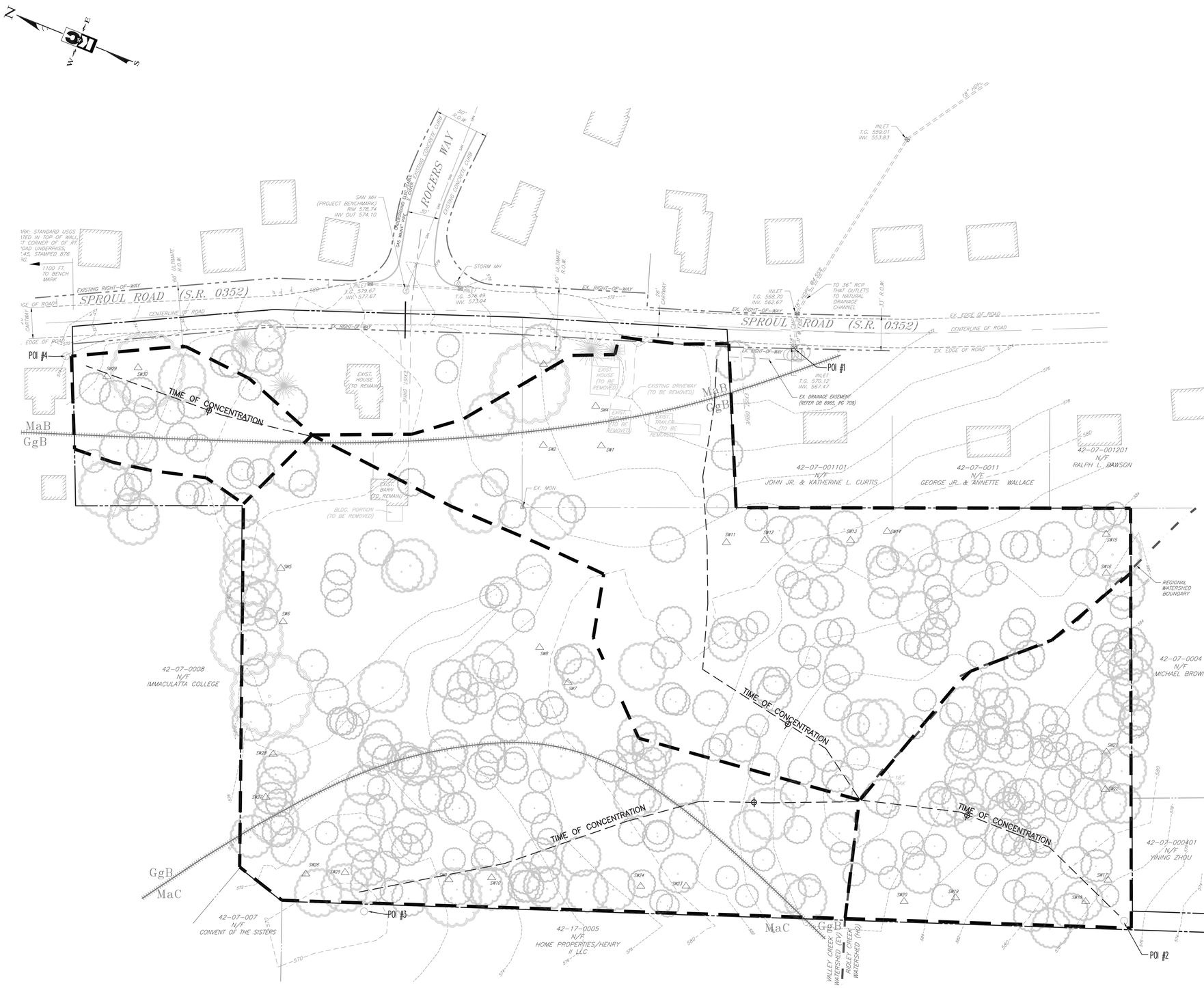

POI #1 = 3.29 ACRES
POI #2 = 1.42 ACRES
POI #3 = 3.93 ACRES
POI #4 = 0.48 ACRES
TOTAL PRE DEVELOPED DRAINAGE AREA = 9.12 ACRES

APPLICANT/EQUITABLE OWNER:
WOODSTONE DEVELOPMENT COMPANY, LP
70 POTTSTOWN PIKE, SUITE 100
CHESTER SPRINGS, PA 19425

SITE ADDRESS:
110 SPROUL ROAD
MALVERN, PA 19355

GRAPHIC SCALE
40 0 20 40 80 160
(IN FEET)
1 inch = 40 ft.

PROJECT SERIAL No. : 20182490802
BEFORE YOU DIG ANYWHERE
IN... PENNSYLVANIA
STOP! CALL 1-800-242-1776
(TOLL FREE)
PA LAW REQUIRES 3 WORKING DAYS NOTICE FOR CONSTRUCTION PHASE AND 10 WORKING DAYS NOTICE IN DESIGN STAGE PENNSYLVANIA ONE CALL SYSTEM, INC.
ALL TRENCHING, SHEETING AND SHORING SHALL BE IN STRICT ACCORDANCE WITH OSHA STANDARDS

ACT NUMBER 287 OF 1974 as AMENDED UTILITY USER LIST

AQUA PENNSYLVANIA, INC.
700 W. SPROUL ROAD
SPRINGFIELD, PA 19064
CONTACT: JOSEPH M. CILIBERTI
PHONE: (484) 470-1075

COMCAST CABLE COMM., INC.
110 SPRINGBROOKE BLVD.
ASTON, PA 19014
CONTACT: DAN CLARK
PHONE: (877) 537-8411

EAST WHITELAND TOWNSHIP
209 CONESTOGA ROAD
MALVERN, PA 19355
CONTACT: TERRY H. WOODMAN
PHONE: (610) 648-0600

PECO ENERGY
3628 HORIZON DRIVE, DELONFILE
KING OF PRUSSIA, PA 19406
CONTACT: SUSAN TERREY
PHONE: (215) 956-3182

VALLEY FORGE SEWER AUTHORITY
333 PAWLING ROAD
PHOENIXVILLE, PA 19460
CONTACT: STEPHEN YUHAS
PHONE: (610) 983-9684

VERIZON PENNSYLVANIA, INC.
900 RACE STREET, 6TH FLOOR
PHILADELPHIA, PA 19107
CONTACT: JOSEPH SCELSA
PHONE: (610) 280-5586

SOILS LEGEND AND TABLE OF LIMITATIONS & RESOLUTIONS
BASED ON U.S.D.A. – N.R.C.S. SOILS SURVEY OF CHESTER COUNTY (CURRENT VERSION)

SYMBOL	MAPPING UNITS	SLOPE	LIMITATIONS FOR SITE DEVELOPMENT: LAND CAPABILITY	HYDRIC SOIL	HYDROLOGIC GROUP	DEPTH TO BEDROCK	DEPTH TO WATER TABLE	DWELLINGS WITH BASEMENTS	RISK OF FROST ACTION	RISK OF EROSION (K FACTOR)	RISK OF CORROSION STEEL	RISK OF CORROSION CONCRETE	DWELLINGS WITHOUT BASEMENTS	LOCAL ROADS AND STREETS	SHALLOW EXCAVATIONS	EMBANKMENTS	LAWNS & LANDSCAPING	ROAD FILL SOURCE	TOPSOIL SOURCE
GgB	GLENELG SILT LOAM	3-8%	2E	NO	B	> 80 in.	> 80 in.	NOT LIMITED	MODERATE	0.37	LOW	MODERATE	NOT LIMITED	VERY LIMITED 3,4	SOMEWHAT LIMITED	SOMEWHAT LIMITED	SOMEWHAT LIMITED	POOR 3	FAIR 6,10
MaB	MANOR LOAM	3-8%	2E	NO	B	72-99 in.	> 80 in.	NOT LIMITED	MODERATE	0.28	MODERATE	HIGH	NOT LIMITED	VERY LIMITED 3,4	SOMEWHAT LIMITED	VERY LIMITED	SOMEWHAT LIMITED	POOR 3	POOR 10
MaC	MANOR LOAM	8-15%	3E	NO	B	59-100 in.	> 80 in.	SOMEWHAT LIMITED	MODERATE	0.28	MODERATE	HIGH	SOMEWHAT LIMITED	SOMEWHAT LIMITED 3,4	SOMEWHAT LIMITED	VERY LIMITED	SOMEWHAT LIMITED	POOR 3	FAIR 6,10

REASONS FOR LIMITATIONS: 1 – SHRINK-SWELL 2 – SLOPE 3 – LOW STRENGTH 4 – FROST ACTION 5 – CUTBANKS CAVE 6 – PIPING 7 – GRAVEL CONTENT 8 – LARGE STONES CONTENT 9 – ROCK FRAGMENTS 10 – HARD TO RECLAIM (ROCK FRAGMENTS) 11 – DEPTH TO SATURATED ZONE

RESOLUTIONS: 1 – K FACTOR – 0.0.37=EROSION RESISTANT, >0.37=HIGHLY ERODED. CLASSIFICATIONS IDENTIFIED IN: DEP E&SPC MANUAL, MARCH 2012.

DISCONTINUANCE, ALTERATION, VACATION OR EXPROPRIATION APPROVED BY BOARD OF SUPERVISORS OF EAST WHITELAND TOWNSHIP, CHESTER COUNTY, PA, IN RE: NO.
PROFESSIONAL ENGINEER
ERIC J. JANETKA
No. 045885
COMMONWEALTH OF PENNSYLVANIA

K&C
KELLY & CLOSE ENGINEERS
CONSULTING ENGINEERS & SURVEYORS
The Summit at Brandywine
Two Wellington Boulevard, Suite 300
Glen Mills, Pennsylvania 19342
610.358.9363 fax 610.358.9372

DATE	REV	DESCRIPTION	BY
7/21/2014	3	PER TOWNSHIP CONSULTANT REVIEWS, NPDES PERMIT REVIEW	E.J.J.
10/25/2018	2	REVISED GRADING, REVISED SANITARY SEWER DESIGN, REVISED SWM	E.J.J.
9/10/2014	1	REVISED PER TWP 8-11-14 AND 8-18-14 REVIEW LETTERS	E.J.J.

date: 7/21/2014
scale: 1" = 40'
drawn by: M.J.B.
checked by: E.J.J.
dwg. name: P-BMP-DA.dwg
project no: N/A

SHIRTZ FARM
110 SPROUL ROAD
EAST WHITELAND TOWNSHIP
CHESTER COUNTY, PENNSYLVANIA

PRE-DEVELOPMENT DRAINAGE AREA PLAN

This document and all information and work product represented by and contained herein, is the sole and exclusive property of James C. Kelly & Associates, Inc. t/a Kelly & Close Engineers. The information contained herein is not to be used for any purpose other than that specifically authorized by Kelly & Close Engineers. Any authority is extended, directly or implied, to any party without express written permission of James C. Kelly & Associates, Inc.
Copyright, 2015, James C. Kelly & Associates, Inc.
All rights reserved

SHEET 15 of 24

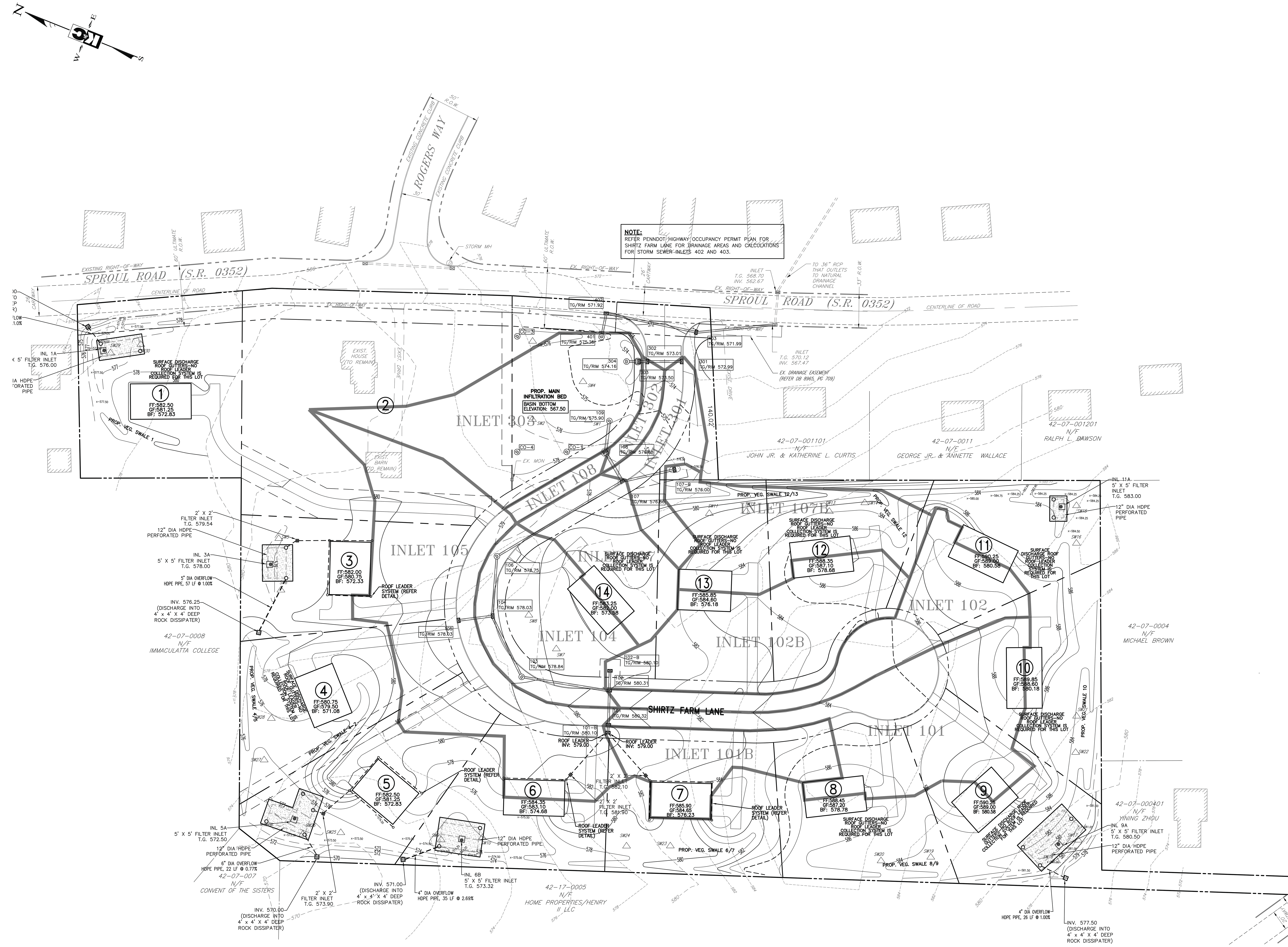

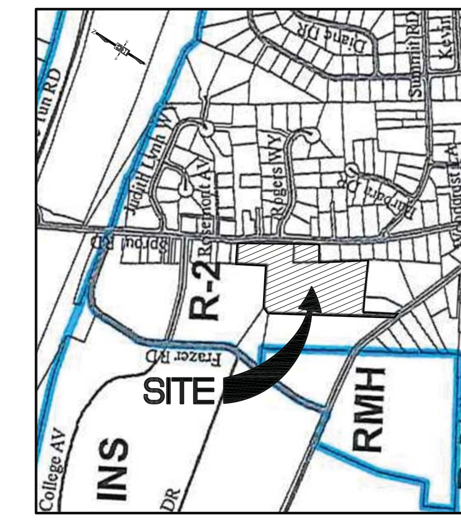

LOCATION MAP

SCALE: 1"=1000'

GENERAL NOTES

1. THE AREAS OF THE PROPOSED SEEPAGE BEDS SHALL BE PROTECTED WITH TREE PROTECTION FENCING DURING SITE CONSTRUCTION. THESE AREAS ARE TO BE CLEARLY MARKED WITH STAKES AND CONSTRUCTION FENCING AND CONSTRUCTION RUNOFF IS TO BE DIRECTED AWAY FROM THEM. ALL TREES WITHIN THESE AREAS MUST BE REMOVED BY HAND.
2. AN OPERATION AND MAINTENANCE (O&M) AGREEMENT MUST BE COMPLETE FOR EACH PRIVATELY OWNED INFILTRATION AND COLLECTION SYSTEM. UPON COMPLETION, THE O&M AGREEMENT MUST BE SIGNED AND FILED WITH THE OFFICE OF RECORDER OF DEEDS. EACH PROPERTY OWNER MUST MAINTAIN AND PRESERVE THE FULL EFFECTIVENESS OF THE STORMWATER MANAGEMENT FACILITY IN PERPETUITY AND IS NOT PERMITTED TO DAMAGE, ALTER OR REMOVE THE FACILITY. THE STORMWATER MANAGEMENT FACILITY SHALL REMAIN IN PLACE AND FUNCTION FOR THE DURATION OF THE PROPERTY USE. OWNER SHALL INSPECT FACILITIES ON A PERIODIC BASIS AND IMPLEMENT MAINTENANCE AS NECESSARY.
3. STORMWATER SEEPAGE BEDS SHALL BE FILLED WITH CLEAN STONE MEETING THE REQUIREMENTS OF FORM 408, SECTION 703 FOR 2B STONE (OR AASHTO NO. 4 STONE OVER 6" OF 2B STONE). THE STONE SHALL BE WRAPPED IN GEOTEXTILE MEETING THE REQUIREMENTS OF PENNDOT PUBLICATION 408, SECTION 735.2, TABLE A FOR CLASS I.
4. ALL INLET BOXES AND STORM MANHOLES SHALL MEET THE REQUIREMENTS OF FORM 408, SECTION 605.
5. COMPACTION OF THE INFILTRATION BOTTOM SURFACE MUST BE AVOIDED. THE CONTRACTOR MUST USE LIGHTWEIGHT CONSTRUCTION EQUIPMENT AND OPERATE MACHINERY FROM OUTSIDE THE INFILTRATION FACILITY PERIMETER AT ALL TIMES. IF APPROVED BY THE TOWNSHIP, EQUIPMENT MAY ENTER THE INFILTRATION BASIN AREA OVER TIMBER MATTING TO PREVENT COMPACTION.
6. REFER TO THE POST CONSTRUCTION STORMWATER MANAGEMENT PLAN AND DETAILS FOR INFILTRATION BED DETAILS.
7. CONTRACTOR SHALL BE RESPONSIBLE FOR ALL OPERATION AND MAINTENANCE FOR ALL EROSION AND SEDIMENT CONTROLS. THE CONTRACTOR WILL BE RESPONSIBLE FOR REPAIR, CLEANING OR REPLACEMENT OF ANY INLETS DAMAGED OR AFFECTED AS A RESULT OF SITE CONSTRUCTION AND/OR FAULTY EROSION AND SEDIMENT CONTROL MAINTENANCE.
8. DURING THE LIFE OF THE PROJECT, ALL EROSION AND SEDIMENTATION CONTROLS DEVISED MUST BE PROPERLY MAINTAINED. MAINTENANCE SHALL INCLUDE THE INSPECTION OF EROSION CONTROL FACILITIES AFTER EACH STORM EVENT AND ON A WEEKLY BASIS. IMMEDIATELY PERFORM CLEANOUT REPAIR AND REPLACEMENT OF THE FACILITIES AS NEEDED. REGRADE, RESEED AND MULCH WASHED OUT AREAS AS THEY OCCUR.
9. SEEDED AREAS THAT HAVE WASHED AWAY SHALL BE FILLED AND GRADED, AS NECESSARY AND THEN RESEEDED. A STRAW COVER SHALL BE APPLIED TO RETAIN THE SEED. STRAW MULCH SHALL BE PLACED AT A RATE OF 3 TONS PER ACRE. EROSION CONTROL MATTING/FABRIC SHALL BE USED TO STABILIZE AREAS THAT HAVE WASHED AWAY MORE THAN TWICE.

NOTE: ROOF TOP DISCONNECT CREDIT WAS TAKEN FOR LOTS 1, 4, 8, 9, 10, 11, 12, 13 14 AND PARTIAL ROOF TOP DISCONNECT CREDIT FOR LOTS 6. STORMWATER ROOF RUNOFF FOR LOTS 3, 5 AND 7 MUST BE CONVEYED VIA A ROOF LEADER COLLECTION SYSTEM TO THE UNDERGROUND INFILTRATION BASIN. THE ROOF LEADER SYSTEM SHOWN IS SCHEMATIC. REFER TO ROOF LEADER SYSTEM DETAIL FOR CONSTRUCTION SPECIFICATIONS. ALL ROOF RUNOFF HAS BEEN ACCOUNTED FOR AND WILL BE DIRECTED TO EITHER INDIVIDUAL ON LOT BEDS OR THE MAIN BED.

POST DEVELOPED = 8.19 ACRES
TOTAL BYPASS = 0.93 ACRES
TOTAL POST DEVELOPED DRAINAGE AREA = 9.12 ACRES

ON LOT BEDS	Width	Length	Depth	Perf. Pipe Size (Inches)	Total Length of Perf. Pipe (Feet)	Perf. Pipe Elev	Bot of Bed Elev
Lot 1	20.0	45.0	3.5	12.0	90.0	570.5	569.5
Lot 3	30.0	36.0	4.5	12.0	126.0	573.5	572.5
Lot 4/5	1,750 SF **		4.0	12.0	196.0	567.0	566.0
Lot 6/7	33.0	45.0	3.5	12.0	162.0	569.0	568.0
Lot 8/9/10	35.0	60.0	3.0	12.0	196.0	577.0	576.0
Lot 11	17.0	25.0	2.5	12.0	56.0	579.5	578.5

** BASIN FOOTPRINT AND DEPTH, ONLY SHOWN; NON–RECTANGULAR BASIN–REFER DIMENSIONS ON PLAN.

INFILTRATION BED DESIGN TABLE

INFILTRATION TESTING:
INFILTRATION TESTING WAS PERFORMED IN JUNE 2014 BY ENVIRONMENTAL MANAGEMENT CONSULTING, INC, 3706 COREY LANE, THORNDALE, AP 19372, 484–888–6923.

	TESTING RESULTS: (FS=2.0)	TESTING DEPTH	TOP OF BED	BOTTOM BED ELEV	TESTING ELEVATION
LOT 1	4.5 IN/HR	6.5'	573.5	569.5	569.5
LOT 3	3.5 IN/HR	6.5'	577.0	572.5	572.5
LOT 4/5	3.5 IN/HR	5.0'	571.0	566.0	566.0
LOT 6/7	10.1 IN/HR	6.5'	572.5	568.0	568.0
LOT 8/9/10	12.5 IN/HR	5.0'	580.5	576.0	576.0
LOT 11	11.6 IN/HR	5.5'	582.0	578.5	578.5
MAIN BED	1.1 IN/HR	6.0'	572.0	567.5	567.0

NOTE: A 2.0 FACTOR OF SAFETY WAS USED FOR THE INFILTRATION RATE DESIGN OF ALL BMP'S. RATES SHOWN HAVE A FACTOR OF SAFETY OF 2.0 APPLIED. ACTUAL RATES ARE 2 TIMES THE RATES SHOWN.

On Lot Impervious Cover Chart

Lot No.	House and Driveway	Miscellaneous	Total Impervious Cover
Lot 1	5,900	750	6,650
Lot 3	3,780	750	4,530
Lot 4	4,205	750	4,955
Lot 5	4,160	750	4,910
Lot 6	3,505	750	4,255
Lo7 7	5,280	750	6,030
Lot 8	3,495	750	4,245
Lot 9	3,895	750	4,645
Lot 10	3,675	750	4,425
Lot 11	3,660	750	4,410
Lot 12	3,720	750	4,470
Lot 13	3,718	750	4,468
Lot 14	3,360	750	4,110

Lot #2 is an existing lot proposed to remain. No improvements are proposed for existing Lot 2. Pool water surface is considered impervious surface. Wood deck (with no impervious surface below) is considered a pervious surface.

SOILS LEGEND AND TABLE OF LIMITATIONS & RESOLUTIONS
BASED ON U.S.D.A. – N.R.C.S. SOILS SURVEY OF BUCKS COUNTY (Ver. 8, Dec. 14, 2013)

SYMBOL	MAPPING UNITS	SLOPE	LAND CAPABILITY	HYDRIC SOIL	HYDROLOGIC GROUP	DEPTH TO BEDROCK	DEPTH TO WATER TABLE	LIMITATIONS FOR SITE DEVELOPMENT: DWELLINGS WITH BASEMENTS	RISK OF FROST ACTION	RISK OF EROSION BY WATER (K FACTOR[1])	RISK OF CORROSION: STEEL	RISK OF CORROSION: CONCRETE	DWELLINGS WITHOUT BASEMENTS	LOCAL ROADS AND STREETS	SHALLOW EXCAVATIONS	EMBANKMENTS	LAWNS & LANDSCAPING	ROAD FILL SOURCE	TOPSOIL SOURCE
GgB	GLENELG SILT LOAM	3–8%	2E	NO	B	> 80 in.	> 80 in.	NOT LIMITED	MODERATE	0.37	LOW	MODERATE	NOT LIMITED	VERY LIMITED 3,4	SOMEWHAT LIMITED	SOMEWHAT LIMITED	SOMEWHAT LIMITED	POOR 3	FAIR 9
MaB	MANOR LOAM	3–8%	2E	NO	B	72–99 in.	> 80 in.	NOT LIMITED	MODERATE	0.28	MODERATE	HIGH	NOT LIMITED	VERY LIMITED 3,4	SOMEWHAT LIMITED	VERY LIMITED	SOMEWHAT LIMITED	POOR 3	POOR 10
MaC	MANOR LOAM	8–15%	3E	NO	B	59–100 in.	> 80 in.	SOMEWHAT LIMITED	MODERATE	0.28	MODERATE	HIGH	SOMEWHAT LIMITED	SOMEWHAT LIMITED 3,4	SOMEWHAT LIMITED	VERY LIMITED	SOMEWHAT LIMITED	POOR 3	FAIR 9,10

REASONS FOR LIMITATIONS: 1 – SHRINK–SWELL 2 – SLOPE 3 – LOW STRENGTH 4 – FROST ACTION 5 – CUTBANKS CAVE 6 – PIPING 7 – GRAVEL CONTENT 8 – LARGE STONES CONTENT 9 – ROCK FRAGMENTS 10 – HARD TO RECLAIM (ROCK FRAGMENTS) 11 – DEPTH TO SATURATED ZONE

FOOTNOTES:
1. K FACTOR – ≤0.37=EROSION RESISTANT; >0.37=EASILIY ERODED. CLASSIFICATIONS IDENTIFIED IN DEP E&SPC MANUAL, MARCH 2012.

PROJECT SERIAL No. : 20182490802

BEFORE YOU DIG ANYWHERE IN... PENNSYLVANIA

PENNSYLVANIA ONE CALL SYSTEM, INC. 1-800-242-1776 STOP-CALL BEFORE YOU DIG!

STOP! CALL 1–800–242–1776 (TOLL FREE)

PA LAW REQUIRES 3 WORKING DAYS NOTICE FOR CONSTRUCTION PHASE AND 10 WORKING DAYS NOTICE IN DESIGN STAGE PENNSYLVANIA ONE CALL SYSTEM, Inc.

ALL TRENCHING, SHEETING AND SHORING SHALL BE IN STRICT ACCORDANCE WITH OSHA STANDARDS.

ACT NUMBER 287 OF 1974 as AMENDED UTILITY USER LIST

AQUA PENNSYLVANIA, INC.
700 W. SPROUL ROAD
SPRINGFIELD, PA 19064
CONTACT: JOSEPH M. CILIBERTI
PHONE: (484) 470–1075

PECO ENERGY
3628 HORIZON DRIVE, DELONFILE
KING OF PRUSSIA, PA 19406
CONTACT: SUSAN TERREY
PHONE: (215) 956–3182

COMCAST CABLE COMM., INC.
110 SPRINGBROOKE BLVD.
ASTON, PA 19014
CONTACT: DAN CLARK
PHONE: (877) 537–8411

VALLEY FORGE SEWER AUTHORITY
333 PAWLING ROAD
PHOENIXVILLE, PA 19460
CONTACT: STEPHEN YUHAS
PHONE: (610) 983–9684

EAST WHITELAND TOWNSHIP
209 CONESTOGA ROAD
MALVERN, PA 19355
CONTACT: TERRY H. WOODMAN
PHONE: (610) 648–0600

VERIZON PENNSYLVANIA, INC.
900 RACE STREET, 6TH FLOOR
PHILADELPHIA, PA 19107
CONTACT: JOSEPH SCELSA
PHONE: (610) 280–5586

APPLICANT/EQUITABLE OWNER:
WOODSTONE DEVELOPMENT COMPANY, LP
70 POTTSTOWN PIKE, SUITE 100
CHESTER SPRINGS, PA 19425

SITE ADDRESS:
110 SPROUL ROAD
MALVERN, PA 19355

GRAPHIC SCALE
40 0 20 40 80 160
(IN FEET)
1 inch = 40 ft.

ORIGINAL PLANS BEAR A REGISTRATION SEAL IN RED INK.

COMMONWEALTH OF PENNSYLVANIA REGISTERED PROFESSIONAL ENGINEER ERIC J. JANETKA No. 050549-E

KELLY & CLOSE ENGINEERS
CONSULTING ENGINEERS & SURVEYORS
The Summit at Brandywine
1786 Wilmington Pike/Suite 300
Glen Mills, Pennsylvania 19342
610.358.9363 fax 610.358.9376

REV.	DATE	DESCRIPTION	BY
3	2/8/2019	REVISE PLAN PER TOWNSHIP CONSULTANT REVIEWS, NPDES PERMIT REVIEW	E.J.J.
2	10/5/2018	REVISED GRADING; REVISED SANITARY SEWER DESIGN; REVISED SWM	E.J.J.
1	9/10/2014	REVISED PER TWP 8–11–14 AND 8–18–14 REVIEW LETTERS	E.J.J.

date: 7/21/2014
scale: 1" = 40'
drawn by: M.J.B.
checked by: E.J.J.
dwg. name: F–BMP–DA.dwg
project no.: N/A

SHIRTZ FARM

110 SPROUL ROAD
EAST WHITELAND TOWNSHIP
CHESTER COUNTY, PENNSYLVANIA

RECORDING PLAN SHEET 6 OF 6

INLET DRAINAGE AREA PLAN

This document and all information and work product represented by and contained herein, is the sole and exclusive property of James C. Kelly & Associates, Inc., t/a Kelly & Close Engineers. The information contained herein is licensed only for limited use by the intended recipient, and no license, permission or authority is extended, directly or implied, to any party without express written permission of James C. Kelly & Associates, Inc.
Copyright, 2015, James C. Kelly & Associates, Inc. All rights reserved

E&S PLANNING & DESIGN 102.4(b)(4)

1. THE EROSION AND SEDIMENT CONTROL PLANS WERE DESIGNED BY A LICENSED, PROFESSIONAL ENGINEER WITH SIGNIFICANT EROSION AND SEDIMENT CONTROL DESIGN EXPERIENCE WITH PROJECTS OF THIS NATURE.
2. THE E&S PLAN MINIMIZES EXTENT AND DURATION OF EARTH DISTURBANCE.
3. THE E&S PLAN MAXIMIZES PROTECTION OF EXISTING DRAINAGE FEATURES AND VEGETATION.
4. THE E&S PLAN MINIMIZES SOIL COMPACTION.
5. THE E&S PLAN UTILIZES OTHER MEASURE OR CONTROLS THAT PREVENT OR MINIMIZE GENERATION OF INCREASED STORMWATER RUNOFF.

SUITABLE FILL

SUITABLE MATERIAL–CLEAN SOIL CONTAINING NOT MORE THAN 30% SILT/CLAY PARTICLES FINER THAN THE NO. 200 SIEVE (BY WEIGHT), AS DETERMINED BY SOIL LABORATORY TESTING AND METHOD OF ASTM D–2487, WHICH IS CAPABLE OF BEING COMPACTED TO THE REQUIRED DENSITY AT THE PROPER MOISTURE CONTENT, AND WHICH IS FREE OF TOPSOIL, ROOTS, TRASH, DEBRIS, FROZEN MATERIAL, ORGANIC MATTER, EXCESS MOISTURE (WATER CONTENT AT COMPACTION MUST BE WITHIN 2% OF OPTIMUM) AND OTHER DELETERIOUS INCLUSIONS. THE LIMITS OF ROCK AS SUITABLE MATERIAL SHALL NOT EXCEED 4 INCHES (4") IN SIZE. THE REMAINDER OF ROCK SHALL EB CLASSED AS COMPACTION OF FILL TO THE REQUIRED DENSITY. SUITABLE FILL SHALL BE APPROVED BY THE ON–SITE GEOTECHNICAL ENGINEER PRIOR TO PLACEMENT AND COMPACTION.

RECYCLING OR DISPOSAL NOTE:

1. THE CONTRACTOR IS RESPONSIBLE FOR THE PROPER RECYCLING AND DISPOSAL OF ALL MATERIALS PER CHAPTER 102.4(B)95)(XI).
2. THE OPERATOR SHALL REMOVE FROM THE SITE, RECYCLE, OR DISPOSE OF ALL BUILDING MATERIALS AND WASTES IN ACCORDANCE WITH THE DEPARTMENT'S SOLID WASTE MANAGEMENT REGULATIONS AT 25 PA. CODE 260.1 ET SEQ., 271.1 ET SEQ., AND 287.1 ET SEQ. THE CONTRACTOR SHALL NOT ILLEGALLY BURY, DUMP OR DISCHARGE ANY BUILDING MATERIAL OR WASTES AT THE SITE.

THERMAL IMPACTS NOTE:

1. THERMAL IMPACTS ARE NOT ANTICIPATED. THE PROJECT IS DESIGNED TO DIRECT IMPERVIOUS AREA RUNOFF TO VEGETATIVE SWALES AND SUBSURFACE INFILTRATION FACILITIES WITH AMENDED SOILS. DIRECTING RUNOFF TO INFILTRATION FACILITIES WILL MITIGATE POTENTIAL THERMAL IMPACTS FOR THE SITE. THE TEMPERATURE OF RUNOFF NOT BEING INFILTRATED WILL DECREASE AS IT IS DETAINED WITHIN THE INFILTRATION FACILITIES AND RELEASED AT A COOLER, DECREASED RATE. DURING CONSTRUCTION, THERMAL IMPACT ARE BEING MINIMIZED BY LIMITING DISTURBED AREAS AND VEGETATIVE CLEARING TO THE MAXIMUM EXTENT POSSIBLE. PERMANENT SEEDING WILL OCCUR AS PRACTICAL AS POSSIBLE TO FACILITATE VEGETATIVE GROWTH DURING GERMINATING MONTHS. RESTORING DISTURBED AREAS AS SOON AS PRACTICAL AND DIRECTING SITE RUNOFF TO VEGETATIVE AREAS (LIKE VEGETATIVE SWALES AND INFILTRATION FACILITIES WITH AMENDED SOILS) WILL REDUCE THE TEMPERATURE OF RUNOFF DURING CONSTRUCTION AND PRIOR TO ENTERING THE INFILTRATION FACILITIES.

WATERSHED NOTE:

THIS PROJECT IS LOCATED IN THE RIDLEY AND VALLEY CREEK WATERSHEDS, WHICH ARE CLASSIFIED AS HQ AND EV STREAMS BY PA CHAPTER 93. THE EXISTING USE IS CLASSIFIED AS HQ AND EV.

EXTREME CARE SHOULD BE EXERCISED IN ALL DISTURBANCE ACTIVITIES TO PREVENT DEGRADATION TO THESE CREEKS. ALL DISTURBED AREA ON WHICH WORK HAS BEEN OR WILL BE STOPPED MUST BE PROMPTLY STABILIZED WITH APPROPRIATE TEMPORARY OR PERMANENT STABILIZATION MEASURES.

THE GOAL OF THE PCSM PLAN IS TO PRESERVE THE INTEGRITY OF STREAM CHANNELS AND MAINTAIN AND PROTECT THE PHYSICAL, BIOLOGICAL AND CHEMICAL QUALITIES OF THE RECEIVING STREAMS.

THE FOLLOWING IS SOURCE AND CAUSE OF IMPAIRMENT ACCORDING TO CATEGORIES 4 AND 5 PA INTEGRATED WATER QUALITY MONITORING AND ASSESSMENT REPORT:

RIDLEY CREEK [APP. E, SILTATION (5), CAUSE UNKNOWN (5), WATER VARIABILITY (4C)]

VALLEY CREEK [APP.C, PCB (4A), APP. B, PATHOGENS, APP. E, SILTATION (5), CAUSE UNKNOWN (5), OTHER HABITAT ALTERATIONS, WATER/FLOW VARIABILITY (4C)].

UNFORESEEN EROSIVE CONDITIONS

1. SHOULD UNFORESEEN EROSIVE CONDITIONS DEVELOP DURING CONSTRUCTION, THE CONTRACTOR SHALL TAKE ACTION TO REMEDY SUCH CONDITIONS AND TO PREVENT DAMAGE TO ADJACENT PROPERTIES AS A RESULT OF INCREASED RUNOFF AND OR SEDIMENT DISPLACEMENT. STOCKPILES OF WOOD CHIPS, HAY BALES, CRUSHED STONE AND OTHER MULCHES SHALL BE HELD IN READINESS TO DEAL IMMEDIATELY WITH EMERGENCY PROBLEMS OF EROSION.
2. THE CONTRACTOR IS ADVISED TO BECOME THOROUGHLY FAMILIAR WITH THE PROVISIONS OF APPENDIX 64, EROSION CONTROL RULES AND REGULATIONS, TITLE 25, PART 1, PADEP, SUBPART C, PROTECTION OF NATURAL RESOURCES, ARTICLE III, WATER RESOURCES, CHAPTER 102, EROSION CONTROL.
3. PROTECTION TO EXISTING TREES AND SHRUBS SHALL BE TAKEN BY THE CONTRACTOR TO ELIMINATE UNNECESSARY DAMAGE.
4. TREE PROTECTION BARRIER FENCING SHALL BE INSTALLED WHERE SHOWN ON THE PLAN AND AT ALL LOCATIONS NECESSARY TO PROTECT/CONFINE EXISTING TREES TO REMAIN.

INTENT OF EROSION & SEDIMENT CONTROL PROGRAM:

THE INTENT OF THIS PROGRAM IS TO PREVENT ACCELERATED EROSION OF THE EXPOSED SITE SOILS DURING THE CONSTRUCTION AND PERMANENT LIFE PERIODS OF THE DEVELOPMENT. THE PROGRAM REQUIRES RETENTION OF ALL SEDIMENT ON THE CONSTRUCTION SITE TO MINIMIZE THE IMPACT OF DEVELOPMENT ON EXISTING STREAMS AND ADJACENT PROPERTY OWNERS. THESE OBJECTIVES WILL BE ACHIEVED BY MINIMIZING THE EXPOSURE TIME OF POTENTIALLY EROSIVE SOILS TO RUNOFF AND THE INSTALLATION OF TEMPORARY AND PERMANENT EROSION AND SEDIMENT CONTROL FACILITIES. THE INTENT OF THIS PROGRAM SHOULD BE UNDERSTOOD AND IMPLEMENTED THROUGHOUT THE ENTIRE DEVELOPMENT. VARIOUS CONSTRUCTION TRADES SHOULD BE APPRISED OF THIS PROGRAM AND DIRECTED TO PREVENT UNDUE DISTURBANCE OF PREPARED AND PROTECTED SURFACES.

CLEAN FILL DEFINITION

TAKEN FROM "INS1RUCTIONS FOR A GENERAL (PAG–2) OR INDIVIDUAL NPDES PERMIT FOR STORMWATER DISCHARGES ASSOCIATED WITH CONSTRUCTION ACTIVITIES", PREPARED BY THE PENNSYLVANIA DEPARTMENT OF ENVIRONMENTAL PROTECTION, DATED MAY 2007.

"UNCONTAMINATED, NON–WATER SOLUBLE, NON–COMPOSABLE, INERT, SOLID MATERIAL. THE TERM INCLUDES SOIL, ROCK, STONE, DREDGED MATERIAL, USED ASPHALT, AND BRICK, BLOCK OR CONCRETE FROM CONSTRUCTION AND DEMOLITION ACTIVITIES THAT IS SEPARATE FROM OTHER WASTE AND IS RECOGNIZABLE AS SUCH. THE TERM DOES NOT INCLUDE MATERIALS PLACED IN OR ON THE WATERS OF THE COMMONWEALTH UNLESS OTHERWISE AUTHORIZED. (THE TERM 'USED ASPHALT' DOES NOT INCLUDE MILLED ASPHALT OR ASPHALT THAT HAS BEEN PROCESSED FOR RE–USE.)"

CLEAN FILL AFFECTED BY A SPILL OR RELEASE OF A REGULATED SUBSTANCE: FILL MATERIALS AFFECTED BY A SPILL OR RELEASE OF A REGULATED SUBSTANCE STILL QUALIFIES AS CLEAN FILL PROVIDED THE TESTING REVEALS THAT THE FILL MATERIAL CONTAINS CONCENTRATIONS OF REGULATED SUBSTANCES THAT ARE BELOW THE RESIDENTIAL LIMITS IN TABLES FP–1A AND FP–1B FOUND IN THE DEPARTMENT'S POLICY "MANAGEMENT OF FILL".

ANY PERSON PLACING CLEAN FILL THAT HAS BEEN AFFECTED BY A SPILL OR RELEASE OF A REGULATED SUBSTANCE MUST USE FORM FP–001 TO CERTIFY THE ORIGIN OF THE FILL MATERIAL AND THE RESULTS OF THE ANALYTICAL TESTING TO QUALIFY THE MATERIAL AS CLEAN FILL. FORM FP–001 MUST BE RETAINED BY THE OWNER OF THE PROPERTY RECEIVING THE FILL. A COPY OF FORM FP–001 CAN BE FOUND AT THE END OF THESE INSTRUCTIONS.

ENVIRONMENTAL DUE DILIGENCE DEFINITION

TAKEN FROM "INSTRUCTIONS FOR A GENERAL (PAG–2) OR INDIVIDUAL NPDES PERMIT FOR STORM WATER DISCHARGES ASSOCIATED WITH CONSTRUCTION ACTIVITIES", PREPARED BY THE PENNSYLVANIA DEPARTMENT OF ENVIRONMENTAL PROTECTION, DATED MAY 2007.

THE APPLICANT MUST PERFORM ENVIRONMENTAL DUE DILIGENCE TO DETERMINE IF THE FILL MATERIALS ASSOCIATED WITH THE PROJECT QUALIFY AS CLEAN FILL. ENVIRONMENTAL DUE DILIGENCE IS DEFINED AS:

"INVESTIGATIVE TECHNIQUES, INCLUDING, BUT NOT LIMITED TO, VISUAL PROPERTY INSPECTIONS, ELECTRONIC DATA BASE SEARCHES, REVIEW OF PROPERTY OWNERSHIP, REVIEW OF PROPERTY USE HISTORY, SANBORN MAPS, ENVIRONMENTAL QUESTIONNAIRES, TRANSACTION SCREENS, ANALYTICAL TESTING, ENVIRONMENTAL ASSESSMENTS OR AUDITS. ANALYTICAL TESTING IS NOT A REQUIRED PART OF DUE DILIGENCE UNLESS VISUAL INSPECTION AND/OR REVIEW OF THE PAST LAND USE OF THE PROPERTY INDICATES THAT THE FILL MAY HAVE BEEN SUBJECTED TO A SPILL OR RELEASE OF REGULATED SUBSTANCE. IF THE FILL MAY HAVE BEEN AFFECTED BY A SPILL OR RELEASE OF A REGULATED SUBSTANCE, IT MUST BE TESTED TO DETERMINE IF IT QUALIFIES AS CLEAN FILL. TESTING MUST BE PERFORMED IN ACCORDANCE WITH APPENDIX A OF THE DEPARTMENT'S POLICY "MANAGEMENT OF FILL".

FILL MATERIAL THAT DOES NOT QUALIFY AS CLEAN FILL IS REGULATED FILL. REGULATED FILL IS WASTE AND MUST BE MANAGED IN ACCORDANCE WITH THE DEPARTMENT'S MUNICIPAL OR RESIDUAL WASTE REGULATIONS BASED ON 25 PA. CODE CHAPTERS 287 RESIDUAL WASTE MANAGEMENT OR 271 MUNICIPAL WASTE MANAGEMENT, WHICHEVER IS APPLICABLE. THESE REGULATIONS ARE AVAILABLE ON–LINE AT WWW.PACODE.COM.

SOILS LEGEND AND TABLE OF LIMITATIONS & RESOLUTIONS BASED ON U.S.D.A. – N.R.C.S. SOILS SURVEY OF CHESTER COUNTY (CURRENT VERSION)

SYMBOL	MAPPING UNITS	SLOPE	LAND CAPABILITY	HYDRIC SOIL	HYDROLOGIC GROUP	DEPTH TO BEDROCK	DEPTH TO WATER TABLE	DWELLINGS WITH BASEMENTS	RISK OF FROST ACTION	RISK OF EROSION BY WATER (K FACTOR[1])	RISK OF CORROSION: STEEL	RISK OF CORROSION: CONCRETE	DWELLINGS WITHOUT BASEMENTS	LOCAL ROADS AND STREETS	SHALLOW EXCAVATIONS	EMBANKMENTS	LAWNS & LANDSCAPING	ROAD FILL SOURCE	TOPSOIL SOURCE
GgB	GLENELG SILT LOAM	3–8%	2E	NO	B	> 80 in.	> 80 in.	NOT LIMITED	MODERATE	0.37	LOW	MODERATE	NOT LIMITED	VERY LIMITED 3,4	SOMEWHAT LIMITED	SOMEWHAT LIMITED	SOMEWHAT LIMITED	POOR 3	FAIR 9
MaB	MANOR LOAM	3–8%	2E	NO	B	72–99 in.	> 80 in.	NOT LIMITED	MODERATE	0.28	MODERATE	HIGH	NOT LIMITED	VERY LIMITED 3,4	SOMEWHAT LIMITED	VERY LIMITED	SOMEWHAT LIMITED	POOR 3	POOR 10
MaC	MANOR LOAM	8–15%	3E	NO	B	59–100 in.	> 80 in.	SOMEWHAT LIMITED	MODERATE	0.28	MODERATE	HIGH	SOMEWHAT LIMITED	SOMEWHAT LIMITED 3,4	SOMEWHAT LIMITED	VERY LIMITED	SOMEWHAT LIMITED	POOR 3	FAIR 9,10

REASONS FOR LIMITATIONS: 1 – SHRINK–SWELL 2 – SLOPE 3 – LOW STRENGTH 4 – FROST ACTION 5 – CUTBANKS CAVE 6 – PIPING 7 – GRAVEL CONTENT 8 – LARGE STONES CONTENT 9 – ROCK FRAGMENTS 10 – HARD TO RECLAIM (ROCK FRAGMENTS) 11 – DEPTH TO SATURATED ZONE

FOOTNOTES:
1. K FACTOR – ≤0.37=EROSION RESISTANT; >0.37=EASILY ERODED. CLASSIFICATIONS IDENTIFIED IN DEP E&SPC MANUAL, MARCH 2012.

INFILTRATION TESTING:

INFILTRATION TESTING WAS PERFORMED IN JUNE 2014 BY ENVIRONMENTAL MANAGEMENT CONSULTING, INC, 3706 COREY LANE, THORNDALE, AP 19372, 484–888–6923.

	TESTING RESULTS: (FS=2.0)	TESTING DEPTH	TOP OF BED	BOTTOM BED ELEV	TESTING ELEVATION
LOT 1	4.5 IN/HR	6.5'	573.5	569.5	569.5
LOT 3	3.5 IN/HR	6.5'	577.0	572.5	572.5
LOT 4/5	3.5 IN/HR	5.0'	571.0	566.0	566.0
LOT 6/7	10.1 IN/HR	6.5'	572.5	568.0	568.0
LOT 8/9/10	12.5 IN/HR	5.0'	580.5	576.0	576.0
LOT 11	11.6 IN/HR	5.5'	582.0	578.5	578.5
MAIN BED	1.1 IN/HR	6.0'	572.0	567.5	567.0

NOTE: A 2.0 FACTOR OF SAFETY WAS USED FOR THE INFILTRATION RATE DESIGN OF ALL BMP'S. RATES SHOWN HAVE A FACTOR OF SAFETY OF 2.0 APPLIED. ACTUAL RATES ARE 2 TIMES THE RATES SHOWN.

DEMOLISHED MATERIAL STOCKPILE NOTE:

LOCATION(S) FOR TEMPORARY STOCKPILES OF DEMOLISHED MATERIALS, SUCH AS DEMOLISHED CONCRETE, PAVING, ETC. SHALL BE APPROVED BY THE OWNER AND DESIGN ENGINEER. DEMOLISHED MATERIAL STOCKPILES CANNOT BE PLACED WITHIN MUNICIPAL RIGHT–OF–WAY AREAS OR OUTSIDE OF THE LIMITS OF DISTURBANCE LINE.

EROSION & SEDIMENT CONTROL NARRATIVE

13 NEW SINGLE FAMILY RESIDENTIAL LOTS ARE PROPOSED WITH ONE EXISTING RESIDENTIAL LOT TO REMAIN. THE SITE LOCATED AT 110 SPROUL ROAD, EAST WHITELAND TOWNSHIP, CHESTER COUNTY, PA. THE EXISTING COVER CONDITIONS CONSISTS MOSTLY OF FOREST AREA. THERE ARE TWO EXISTING SINGLE FAMILY RESIDENCE, BARN, GARAGE AND TRAILER ON SITE. ONLY ONE EXISTING SINGLE FAMILY RESIDENCE AND BARN ARE PROPOSED TO REMAIN WHILE THE SECOND EXISTING SINGLE FAMILY RESIDENCE, GARAGE AND TRAILER ARE PROPOSED TO BE REMOVED.

THE TOTAL PROPOSED LIMIT OF DISTURBANCE IS 8.8 ACRES. EROSION AND SEDIMENT WILL BE CONTROLLED THROUGH THE USE OF A EROSION AND SEDIMENT CONTROL MATTING, INLET PROTECTION, ROCK CONSTRUCTION ENTRANCE, TOPSOIL STOCKPILE, SILT FENCE, ROCK FILTER OUTLET WITH COMPOST, AND COMPOST FILTER SOCK. THE ACTUAL STAGING OF EARTH MOVING ACTIVITIES IS FURTHER DESCRIBED IN THE CONSTRUCTION SEQUENCE.

PAST, PRESENT AND FUTURE USE NOTE:

THE PAST (WITHIN THE LAST 50 YEARS) AND PRESENT LAND USE (WITH LAST 5 YEARS) IS MOSTLY WOODED WITH TWO SINGLE FAMILY DWELLINGS EXISTING ON SITE. THE FUTURE USE (WITHIN THE NEXT 5 YEARS) IS TO DEMOLISH ONE OF THE TWO SINGLE FAMILY RESIDENCE AND CONSTRUCT 13 NEW SINGLE FAMILY HOMES ON A PROPOSED CUL–DE–SAC STREET.

THE CRITICAL STAGES OF THIS PROJECT THAT INCLUDE ENGINEERING OVERSIGHT ARE THE INSTALLATION OF ON LOT INFILTRATION FACILITIES AND THE MAIN INFILTRATION FACILITY LOCATED AT THE FRONT OF THE SITE, AS WELL AS THE CONSTRUCTION OF VEGETATIVE SWALES, LANDSCAPE RESTORATION AND INSTALLATION OF AMENDED SOIL AS SHOWN ON THE PCSM PLAN.

GRASS SWALES

GENERAL MAINTENANCE NOTES

1. MAINTENANCE ACTIVITIES TO BE DONE ANNUALLY AND WITHIN 48 HOURS AFTER A MAJOR STORM EVENT (GREATER THAN 1" RAINFALL DEPTH).
2. INSPECT AND CORRECT EROSION PROBLEMS, DAMAGE TO VEGETATION AND SEDIMENT OR DEBRIS ACCUMULATION. RE–ESTABLISH GROUND COVER (SEED OR PLUGS) WITH EROSION CONTROL BLANKET AS A TEMPORARY COVER. PLANT ALTERNATIVE GROUND COVER SPECIES IF THE CAUSE IS UNSUCCESSFUL GROUND COVER ESTABLISHMENT.
3. CHECK FOR POOLS OR STANDING WATER. DEWATER AND TAKE CORRECTIVE ACTION (INCLUDING BUT NOT LIMITED TO REGRADING TO RESTORE ORIGINAL GRADES OR REPLACEMENT OF TOPSOIL).
4. MOW AND TRIM VEGETATION TO ENSURE SAFETY, FUNCTION AND AESTHETICS. CLEAR ANY ACCUMULATED LITTER PRIOR TO MOWING. MOW ONLY WHEN SWALE IS DRY AND WILL NOT RUT.
5. REGULAR MOWING SHOULD BE APPROPRIATE TO GROUND COVER REQUIREMENTS (GRASSES SHOULD BE MOWED TO A DEPTH OF 3"–5", PERENNIALS SHOULD NOT BE MOWED). DURING THE WINTER MONTHS, MOW GROUND COVER (REGARDLESS OF SPECIES) TO A HEIGHT OF 2" TO ENCOURAGE RE–ESTABLISHMENT OF PERENNIALS AND GRASSES.

LEGEND

EXISTING	DESCRIPTION	PROPOSED
	PROPERTY LINE	
	ADJOINING PROPERTY LINE	
I.P. MON.	IRON PIN, MONUMENT, NAIL	I.P. MON.
	RIGHT–OF–WAY	
	CENTER LINE	
	UTILITY EASEMENT	
578	2' CONTOUR	
580	10' CONTOUR	
	COMPOST FILTER SOCK	CFS–1
	ROCK FILTER OUTLET	
	TREE PROTECTION FENCE	TPF
	ROCK CONSTRUCTION ENTRANCE	
	TOPSOIL STOCKPILE	TS 1
	INLET PROTECTION DEVICE	
	EROSION CONTROL MATTING	S75BN S150BN
	ERNMX–180 SEED MIX	

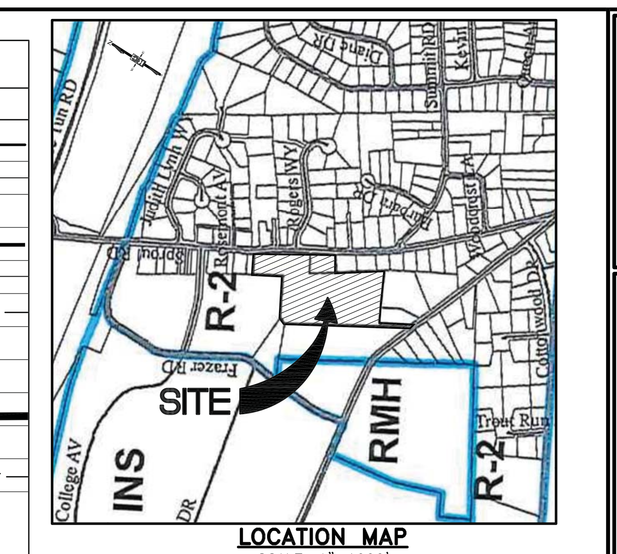

LOCATION MAP
SCALE: 1"=1000'

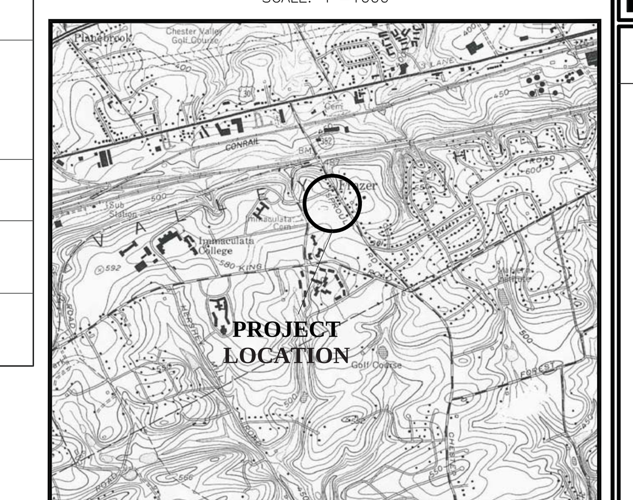

LOCATION MAP

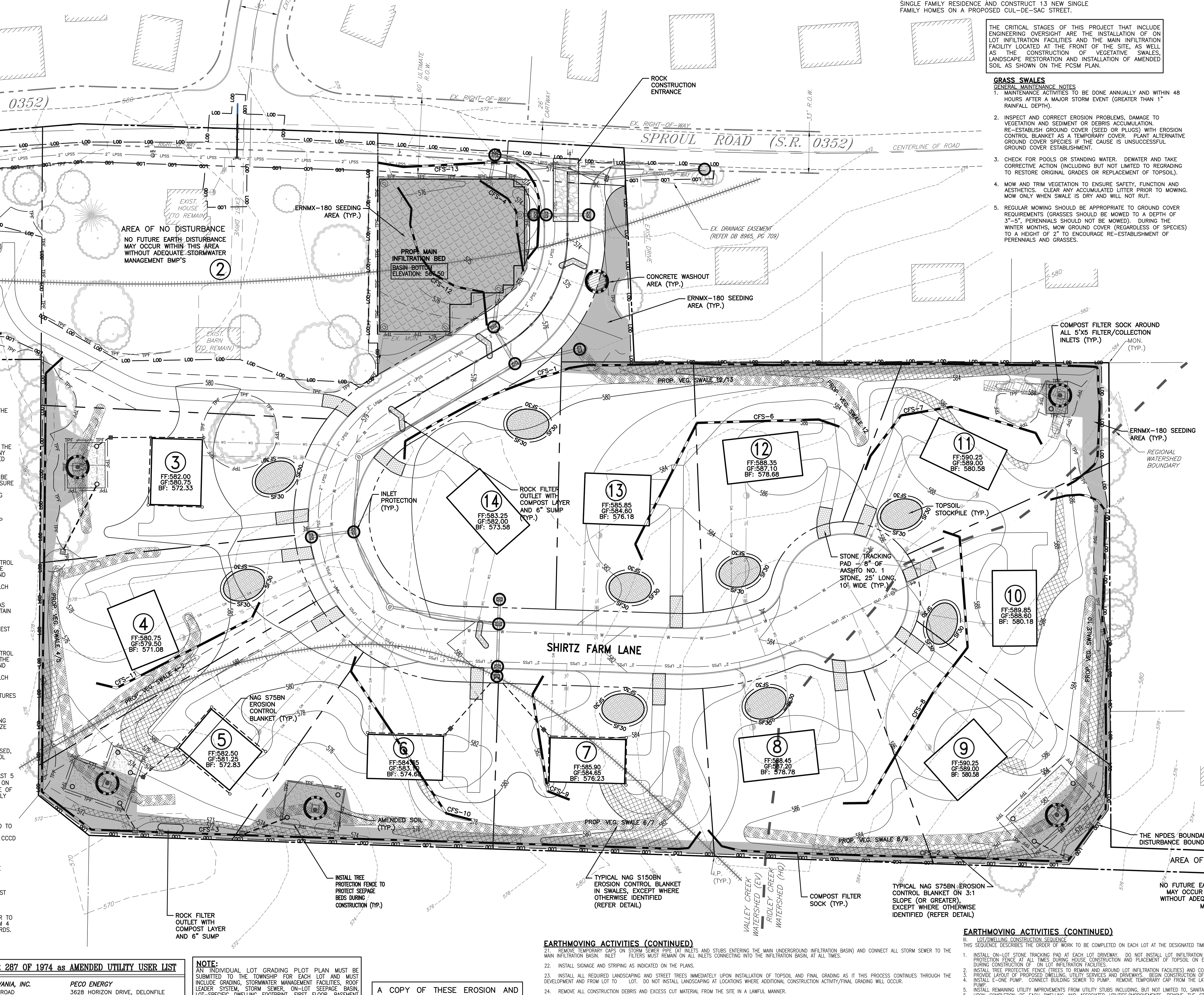

GENERAL NOTES

1. AT LEAST 7 DAYS BEFORE STARTING ANY EARTH DISTURBANCE ACTIVITIES, THE OPERATOR SHALL INVITE ALL CONTRACTORS INVOLVED IN THOSE ACTIVITIES INCLUDING BUT NOT LIMITED TO: THE LANDOWNER AND ALL APPROPRIATE MUNICIPAL OFFICIALS, A REPRESENTATIVE FROM THE CHESTER COUNTY CONSERVATION DISTRICT FOR AN ON SITE PRE–CONSTRUCTION MEETING.
2. ALL EARTH DISTURBANCE ACTIVITIES SHALL PROCEED IN ACCORDANCE WITH THE CONSTRUCTION SEQUENCE. EACH STAGE SHALL BE COMPLETED BEFORE ANY FOLLOWING STAGE IS INITIATED. CLEARING AND GRUBBING SHALL BE LIMITED ONLY TO THOSE AREAS DESCRIBED IN EACH STATE.
3. A COPY OF THE APPROVED EROSION AND SEDIMENT CONTROL PLAN MUST BE AVAILABLE AT THE PROJECT SITE AT ALL TIMES. THE OPERATOR SHALL ASSURE THAT AN EROSION AND SEDIMENT CONTROL PLANS HAS BEEN PREPARED, APPROVED BY THE CHESTER COUNTY CONSERVATION DISTRICT AND IS BEING IMPLEMENTED AND MAINTAINED FOR ALL SOIL AND/OR ROCK SPOIL AND BORROW, REGARDLESS OF THEIR LOCATIONS.
4. PRIOR TO ANY EARTH DISTURBANCE, EAST WHITELAND TOWNSHIP AND PADEP MUST BE CONTACTED TO SCHEDULE A PRECONSTRUCTION MEETING.
5. THE CONTRACTOR SHALL BE RESPONSIBLE FOR ANY CLEANING OR REPAIRS NEEDED ON TOWNSHIP–OWNED INFRASTRUCTURE DUE TO FAILURE OF ANY EROSION AND SEDIMENT CONTROL PRACTICES.
6. DURING THE LIFE OF THE PROJECT, ALL EROSION AND SEDIMENTATION CONTROL DEVISED MUST BE PROPERLY MAINTAINED. MAINTENANCE SHALL INCLUDE THE INSPECTION OF EROSION CONTROL FACILITIES AFTER EACH STORM EVENT AND ON A WEEKLY BASIS. IMMEDIATELY PERFORM CLEANOUT REPAIR AND REPLACEMENT OF THE FACILITIES AS NEEDED. REGRADE, RESEED AND MULCH WASHED OUT AREAS AS THEY OCCUR.
7. SEEDED AREAS THAT HAVE WASHED AWAY SHALL BE FILLED AND GRADED, AS NECESSARY AND THEN RESEED. A STRAW COVER SHALL BE APPLIED TO RETAIN THE SEED.
8. INSPECTION AND MAINTENANCE OF ALL EROSION AND SEDIMENT CONTROL BEST MANAGEMENT PRACTICES SHALL OCCUR ON A WEEKLY BASIS, BEFORE ANY ANTICIPATED PRECIPITATION EVENTS, AND AFTER ALL PRECIPITATION EVENTS.
9. DURING THE LIFE OF THE PROJECT, ALL EROSION AND SEDIMENTATION CONTROL DEVISED MUST BE PROPERLY MAINTAINED. MAINTENANCE SHALL INCLUDE THE INSPECTION OF EROSION CONTROL FACILITIES AFTER EACH STORM EVENT AND ON A WEEKLY BASIS. IMMEDIATELY PERFORM CLEANOUT REPAIR AND REPLACEMENT OF THE FACILITIES AS NEEDED. REGRADE, RESEED AND MULCH WASHED OUT AREAS AS THEY OCCUR.
10. THE CONTRACTOR SHALL MAXIMIZE PROTECTION OF EXISTING DRAINAGE FEATURES AND VEGETATION.
11. THE CONTRACTOR IS RESPONSIBLE TO MINIMIZE TO THE FULLEST EXTENT POSSIBLE) EROSION AND SEDIMENT AS WELL AS EARTH DISTURBANCE DURING THE ENTIRE DURATION OF CONSTRUCTION. THE CONTRACTOR SHALL MINIMIZE SOIL COMPACTION AND UTILIZE CONTROL MEASURE TO PREVENT INCREASED STORMWATER RUNOFF.
12. THE EROSION AND SEDIMENT CONTROL PLANS WERE DESIGNED BY A LICENSED, PROFESSIONAL ENGINEER WITH SIGNIFICANT EROSION AND SEDIMENT CONTROL DESIGN EXPERIENCE OF PROJECTS OF THIS NATURE.
13. THE PAST (WITHIN THE LAST 50 YEARS) AND PRESENT LAND USE (WITH LAST 5 YEARS) IS MOSTLY WOODED WITH TWO SINGLE FAMILY DWELLINGS EXISTING ON SITE. THE FUTURE USE (WITHIN THE NEXT 5 YEARS) IS TO DEMOLISH ONE OF THE TWO SINGLE FAMILY RESIDENCE AND CONSTRUCT 13 NEW SINGLE FAMILY HOMES ON A PROPOSED CUL–DE–SAC STREET.
14. REFER TO DEMOLITION PLAN FOR TREE PROTECTION FENCE LOCATIONS.
15. SEDIMENT TRACKED ONTO ANY ROADWAY OR SIDEWALK SHALL BE RETURNED TO THE CONSTRUCTION SITE BY THE END OF EACH WORKDAY AND AS NEEDED THROUGHOUT THE WORK DAY OR AS DIRECTED BY THE TOWNSHIP OR THE CCCD AND DISPOSED OF AS A MANNER DESCRIBED IN THIS PLAN. IN NO CASE SHALL THE SEDIMENT BE WASHED OR SWEPT INTO ANY ROAD SIDE DITCH, STORM SEWER OR SURFACE WATER.
16. UPON COMPLETION OR TEMPORARY CESSATION OF THE EARTH DISTURBANCE ACTIVITY THAT WILL EXCEED 4 DAYS OR ANY STAGE THEREOF, THE PROJECT SITE SHALL BE IMMEDIATELY STABILIZED WITH THE APPROPRIATE TEMPORARY OR PERMANENT STABILIZATION. NOTE: HYDROSEED IS NOT CONSIDERED STABILIZED UNTIL IT GERMINATES. HAY OR STRAW MULCH MUST BE APPLIED AT 3.0 TONS PER ACRES.
17. AREAS WHICH ARE TO BE TOP–SOILED SHALL BE SCARIFIED TO A MINIMUM DEPTH OF 3 TO 5 INCHES (6 TO 12 INCHES ON COMPACTED SOILS) PRIOR TO PLACEMENT OF TOPSOIL. AREAS TO BE VEGETATED SHALL HAVE A MINIMUM 4 INCHES OF TOPSOIL IN PLACE PRIOR TO SEEDING AND MULCHING, I.E. YARDS.

EARTHMOVING ACTIVITIES

I. GENERAL

1. THE ACTIVITIES TO BE PERFORMED ARE THE CONSTRUCTION OF 13 SINGLE FAMILY DETACHED DWELLINGS, A CUL–DE–SAC STREET, PARTIAL WIDENING AND ENTRANCE IMPROVEMENTS TO SPROUL ROAD (S.R. 0352), DRIVEWAYS AND ASSOCIATED UTILITIES, STORM SEWER AND STORMWATER MANAGEMENT FACILTIES INCLUDING UNDERGROUND INFILTRATION BASINS.
2. TOTAL PROPOSED GROUND DISTURBANCE: 8.85 ACRES.
3. CLEARING AND GRUBBING SHALL BE LIMITED TO ONLY THOSE AREAS IDENTIFIED IN EACH STAGE. CONSTRUCTION SHALL BE ACCOMPLISHED IN ONE PHASE.
4. THE OPERATOR SHALL REMOVE FROM THE SITE, RECYCLE OR DISPOSE OF ALL BUILDING MATERIALS AND WASTES IN ACCORDANCE WITH THE DEPARTMENT'S SOLID WASTE MANAGEMENT REGULATIONS AT 25 PA CODE 260.1 ET SEQ., 271.1 E. SEQ. AND 287.1 EL SEQ.
5. BEFORE DISPOSING OF SOIL OR RECEIVING BORROW FOR THE SITE, THE OPERATOR MUST ASSURE THAT EACH SPOIL OR BORROW AREA HAS AN EROSION AND SEDIMENT CONTROL PLAN APPROVED BY THE CHESTER COUNTY CONSERVATION DISTRICT, AND WHICH IS BEING IMPLEMENTED AND MAINTAINED ACCORDING TO CHAPTER 102 REGULATIONS.
6. CONTRACTOR MUST PROVIDE AN AS BUILT SURVEY OF THE PROJECT TO THE TOWNSHIP WHICH SHALL GENERALLY INCLUDE, BUT NOT BE LIMITED TO THE FOLLOWING ITEMS:
   A. AS BUILT PLAN TO INCLUDE GRADING AND DRAINAGE INCLUDING THE PROPOSED BASINS AND ASSOCIATED STRUCTURES INCLUDING BUT NOT LIMITED TO MANHOLE/INLET RIM AND GRATE ELEVA11ONS, INVERTS, AND SUMPS; PIPE LENGTH, SLOPE, PIPE SIZE AND MATERIAL, ETC.
   B. AS BUILT PLAN MUST BE PREPARED AND SIGN/SEALED BY A LAND SURVEYOR LICENSED IN THE COMMONWEALTH OF PENNSYLVANIA.
7. CONTRACTOR MUST FIELD–VERIFY EXISTING SPOT ELEVATIONS AND INVERTS AS DESIGNATED ON THE PLAN PRIOR TO CONSTRUCTION. THE VERIFIED ELEVATIONS MUST BE PROVIDED TO THE SITE/CIVIL ENGINEER PRIOR TO CONSTRUCTION.
8. INFILTRATION BASINS MAY NOT BE UTILIZED AS SEDIMENT TRAPS.
9. ALL STRUCTURES ASSOCIATED WITH CONSTRUCTION OF SEDIMENT AND EROSION CONTROL MEASURES MUST BE AVAILABLE ON–SITE PRIOR TO ANY EARTH MOVING/DISTURBANCE.
10. CONSTRUCTION/TREE PROTECTION FENCE SHALL BE INSTALLED WHERE SHOWN ON THE PLAN AND AT ANY ADDITIONAL LOCATIONS AT THE DISCRETION OF THE TOWNSHIP OR THE TOWNSHIP ENGINEER OR THEIR REPRESENTATIVE IN THE FIELD. FENCE LOCATION SHALL BE INSTALLED TO PROTECT THE PUBLIC FROM LAND DISTURBANCE ACTIVITIES AND TO MAINTAIN SAFE VEHICULAR TRAFFIC PATTERNS.
11. CONTRACTOR MUST CONFIRM LOCATION OF EXISTING UTILITIES, ON–SITE AND WITHIN THE RIGHT OF WAYS (INCLUDING THE EXISTING BUILDINGS TO REMAIN) PRIOR TO DEMOLITION (INCLUDING BUT NOT LIMITED TO TELEPHONE, GAS, ELECTRIC, CABLE, SANITARY SEWER, WATER AND STORM SEWER).
12. REFER TO THE PLANS AND SOIL EROSION AND SEDIMENT POLLUTION CONTROL NARRATIVE FOR EROSION CONTROL MAINTENANCE PROCEDURES.

II. SEQUENCE OF SITE CONSTRUCTION

ALL EARTH DISTURBANCE ACTIVITIES SHALL PROCEED IN ACCORDANCE WITH THE FOLLOWING SEQUENCE. EACH STAGE SHALL BE COMPLETED BEFORE ANY FOLLOWING STAGE IS INITIATED. IN ALL CASES, LOGICAL AND PROPER CONSTRUCTION AND EROSION CONTROL TECHNIQUES SHALL BE FOLLOWED. BEFORE IMPLEMENTING ANY REVISIONS TO THE APPROVED EROSION AND SEDIMENT CONTROL PLAN OR REVISIONS TO OTHER PLANS WHICH MAY AFFECT THE EFFECTIVENESS OF THE APPROVED E&S CONTROL PLAN, THE OPERATOR MUST RECEIVE APPROVAL OF THE REVISIONS FROM THE CHESTER COUNTY CONSERVATION DISTRICT AND THE TOWNSHIP.

PLEASE NOTE, THE CRITICAL STAGES OF THIS PROJECT THAT INCLUDE ENGINEERING OVERSIGHT ARE THE INSTALLATION OF ON LOT INFILTRATION FACILITIES AND THE MAIN INFILTRATION FACILITY LOCATED AT THE FRONT OF THE SITE, AS WELL AS THE CONSTRUCTION OF VEGETATIVE SWALES AND AREAS TO RECEIVE AMENDED SOIL AS SHOWN ON THE PCSM PLAN AND THE PCSM DETAILS PLANZ.

1. AT LEAST 3 DAYS BEFORE STARTING ANY EARTH DISTURBANCE ACTIVITIES, ALL CONTRACTORS INVOLVED IN THOSE ACTIVITIES SHALL NOTIFY THE PENNSYLVANIA ONE CALL SYSTEM INCORPORATED AT 1–800–242–1776 FOR THE LOCATION OF EXISTING UNDERGROUND UTILITIES.
2. UPON COMPLETION OR TEMPORARY CESSATION OF THE EARTH DISTURBANCE ACTIVITY, THAT WILL EXCEED 4 DAYS, OR ANY STAGE THEREOF, THE PROJECT SITE SHALL BE IMMEDIATELY STABILIZED WITH THE APPROPRIATE TEMPORARY OR PERMANENT STABILIZATION. AT LEAST SEVEN (7) DAYS BEFORE COMMENCEMENT OF ANY EARTH DISTURBANCE ACTIVITIES THE OPERATOR SHALL CONDUCT AN ON–SITE PRE–CONSTRUCTION MEETING WITH THE TOWNSHIP AND THE CHESTER COUNTY CONSERVATION DISTRICT. ALL PERMITTEES, CO–PERMITTEES, OPERATORS AND LICENSED PROFESSIONALS/DESIGNERS RESPONSIBLE FOR EARTH DISTURBANCE ACTIVITIES INCLUDING IMPLEMENTATION OF E&S AND PCSM PLANS AND THE EROSION AND SEDIMENTATION CONTROL PLAN PREPARER, MUST BE PRESENT AT THE PRE–CONSTRUCTION MEETING AND AT THE CRITICAL STAGES OF IMPLEMENTATION IDENTIFIED IN THE SEQUENCE BELOW.
3. INSTALL INLET PROTECTION ON EXISTING STORM SEWER INLETS ON SPROUL ROAD, JUST DOWNGRADE OF THE CONSTRUCTION ENTRANCE.
4. INSTALL CONSTRUCTION ENTRANCE ON SPROUL ROAD AS INDICATED ON THE PLAN. POST SIGNAGE AT THE SAME LOCATION WITH WORDING "CONSTRUCTION ENTRANCE".
5. INSTALL TREE PROTECTION FENCE AROUND INFILTRATION BASIN LOCATIONS (FOR PROTECTION) AS SHOWN ON THE PLAN. LOCATION OF FENCE MUST BE BASED ON SURVEY STAKE–OUT. INSTALL ALL OTHER SEGMENTS OF TREE PROTECTION FENCE (AS NOTED ON EROSION CONTROL PLAN).
6. INSTALL COMPOST FILTER SOCKS CFS–1, CFS–2, CFS–3 AND CFS–5 (AS NOTED ON EROSION CONTROL PLAN) AND INTERIM COMPOST FILTER SOCKS CFS–6, CFS–7, CFS–8, CFS–9, CFS–10 AND CFS–11. INSTALL ROCK FILTER OUTLET AT COMPOST FILTER SOCKS INTERIM COMPOST SILT SOCKS SHALL BE RELOCATED TO AN APPROPRIATE LOCATION TO CONTAIN SEDIMENT AND SLOW DOWN RUNOFF AS ON–LOT GRADING PROGRESSES. IF AT ANY TIME INTERIM COMPOST SILT SOCKS START TO DETERIORATE, THE INTERIM COMPOST SILT SOCKS SHALL BE REMOVED AND DISPOSED OF PER APPLICABLE STATE DISPOSAL REGULATIONS.
7. PRIOR TO STARTING ANY SITE WORK, CONSTRUCTION OF THE OF THE FOLLOWING PARTS OF THE LPSS SYSTEMS SHALL BE COMPLETED AND SEWER SERVICE FOR THE EXISTING HOUSE ON LOT #2 SHALL BE TRANSFERRED FROM THE EXISTING SEPTIC SYSTEM TO THE NEW LPSS SYSTEM. BECAUSE LOCATION OF THE EXISTING SEPTIC SYSTEM IS NOT KNOWN, THIS STEP IS NECESSARY TO BE COMPLETE PRIOR TO STARTING ANY SITE WORK TO AVOID ABRUPT LOSS OFF SEWER SERVICE OF THE EXISTING HOUSE DUE TO DAMAGE OF THE SEPTIC SYSTEM DURING SITE WORK:
   - LPSS MAIN ALONG RODGERS WAY INCLUDING CONNECTION TO EXISTING MANHOLE (APPROXIMATE STA 0+17) AND FLUSHING STATION AT LPSS MAIN TEE INTERSECTION (APPROXIMATE STA –0+55 "RODGERS WAY" / STA 3+18 "SPROUL ROAD").
   - LPSS MAIN ALONG SPROUL ROAD FROM ITS NORTHERLY END "CAPPED END FOR FUTURE CONNECTION" (APPROXIMATE STA 2+99) TO ABOVE FLUSHING STATION (APPROXIMATE STA 3+18).
   - A TEMPORARY CAP SHALL BE INSTALLED APPROXIMATELY AT STA 3+25 "SPROUL ROAD" JUST SOUTH OF THE FLUSHING STATION VALVE ON THE SOUTHERLY LEG OF THE LPSS MAIN TEE INTERSECTION. FOLLOW "CAPPED END FOR FUTURE CONNECTION DETAIL". THIS TEMPORARY CAP WILL BE REMOVED WHEN READY TO CONTINUE FURTHER CONSTRUCTION OF LPSS MAIN.
   - LPSS LATERAL FOR LOT #2 INCLUDING SHUT OFF VALVE.
   - E/ONE PUMP STATION WITH ABOVE LATERAL CONNECTED TO IT.
   - TRANSFER OF BUILDING SEWER CONNECTION OF THE EXISTING HOUSE TO CONNECT TO ABOVE PUMP STATION.
8. REMOVE ITEMS (AS SHOWN ON THE EXISTING FEATURES/DEMOLITION PLAN). REMOVAL INCLUDES BUT MAY NOT BE LIMITED TO EXISTING DWELLING/STRUCTURES, BITUMINOUS PAVING, CONCRETE, WALKS, ACCESSORY BUILDINGS, UNDERGROUND UTILITIES TO BE ABANDONED, ETC. ALL CONSTRUCTION DEBRIS SHALL BE HAULED TO AN APPROVED CONSTRUCTION WASTE DISPOSAL SITE.
9. CLEAR AND GRUB EXISTING VEGETATION WITHIN THE APPROVED LIMIT OF DISTURBANCE. CARE SHOULD BE TAKEN TO HAND–REMOVE ALL VEGETATION EXISTING WITHIN THE LOCATION OF PROPOSED INFILTRATION BASINS. INSTALL SILT FENCE AROUND INFILTRATION BASIN LOCATIONS (ONCE VEGETATION REMOVAL IS COMPLETE).
10. BEGIN INSTALLATION OF THE STORM SEWER SYSTEM FROM THE EXISTING INLET IN SPROUL ROAD TO THE MAIN INFILTRATION BASIN OUTLET STRUCTURE; THEN FROM INLET NO. 301 TO INLET NO. 302, STARTING AT THE DOWNSTREAM END AND WORKING UPSTREAM. THE LENGTH OF PIPE INSTALLED SHALL BE LIMITED TO THE LENGTH OF PIPE THAT CAN BE INSTALLED IN ONE (1) DAY. TEMPORARILY CAP BOTH PIPES AT THE MAIN BASIN LOCATION AND BACKFILL. INSTALL STORM SEWER FROM INLET NO. 402 TO INLET NO. 403. INSTALL INLET PROTECTION ON ALL NEW INLETS AS THEY ARE CONSTRUCTED. REPAIR ANY DAMAGE TO THE CONSTRUCTION ENTRANCE BY PLACING NEW STONE.
11. STRIP AND STOCKPILE TOPSOIL. STOCKPILE SIDE SLOPES SHALL BE 3H:1V OR FLATTER – PLACE SILT FENCE AROUND BASE OF TOPSOIL STOCKPILE(S) AS SHOWN ON THE PLAN.
12. PERFORM BULK EARTHWORK TO ACHIEVE ROUGH GRADES AND SUBBASE ELEVATION OF THE PROPOSED ROAD, LOTS, & SWALES. INSTALL REMAINING PORTION OF COMPOST FILTER SOCKS CFS–1 AND CFS–4.
13. AS LOTS BECOME AVAILABLE, BEGIN CONSTRUCTION OF DWELLINGS – REFER TO LOT/DWELLING CONSTRUCTION SEQUENCE (ON THIS SHEET)
14. PLACE TOPSOIL ON ALL AREAS OF THE DEVELOPMENT THAT HAVE BEEN COMPLETED TO ROUGH GRADE (EXCEPT IN THE VICINITY OF PROPOSED LOT IMPROVEMENTS), FINAL GRADE, RAKE, SEED, AND STABILIZE WITH STRAW MULCH. INSTALL EROSION CONTROL MATTING WHERE SHOWN ON THE PLAN AND ON ALL SLOPES 3:1 OR STEEPER.
15. INSTALL THE MAIN UNDERGROUND INFILTRATION BASIN (AT SITE ENTRANCE). THE BOTTOM OF THE INFILTRATION BASIN SHALL BE SCARIFIED PRIOR TO PLACEMENT OF GEOTEXTILE AND AGGREGATE. INSTALL AND STUB ALL BASIN INFLOW PIPES, MARK PIPE STUB LOCATIONS AND TEMPORARILY BACKFILL. NO STORMWATER RUNOFF IS PERMITTED INTO THE BASIN UNTIL ALL TRIBUTARY DRAINAGE AREA TO THE BASIN IS PERMANENTLY STABILIZED.
16. REMOVE TEMPORARY CAP FROM THE SOUTHERLY LEG OF THE LPSS AIN TEE INTERSECTION (APPROXIMATE STA 3+25 "SPROUL ROAD" AND COMPLETE CONSTRUCTION OF LPSS MAIN ALONG SPROUL ROAD UP TO ITS SOUTHERLY END INCLUDING CAPPED END FOR FUTURE CONNECTION (APPROXIMATE STA 6+19).
17. COMPLETE CONSTRUCTION OF LPSS MAIN ALONG PROPOSED SUBDIVISION ROAD (ROAD A) FROM FLUSHING STATION AT LPSS MAIN TEE INTERSECTION ON SPROUL ROAD (APPROXIMATE STA 5+22 "SPROUL ROAD" / STA 0+19 "Road A") UP TO FLUSHING STATIONS AT ITS END (APPROXIMATE STA 8+98 "ROAD A"). COMPLETE CONSTRUCTION OF LPSS LATERALS FOR ALL PROPOSED LOTS UP TO AND INCLUDING SHUT OFF VALVES WITH TEMPORARY PLUG ON THE LOT SIDE OF EACH LATERALS.
18. INSTALL STORM SEWER, & WATER MAIN WITHIN THE PROPOSED ROADWAY, INCLUDING STORM SEWER FROM INLET NO. 107 TO INLET NO. 108. STUB AND CAP STORM SEWER PIPE (OUT OF INLET NO. 108) AT THE BACK OF THE INLET AND TEMPORARILY BACKFILL. INLET PROTECTION SHALL BE IMMEDIATELY INSTALLED IN INLETS AS THEY ARE INSTALLED. IMMEDIATELY ESTABLISH FINAL GRADE OVER THE PROPOSED ROADWAY AS SHOWN ON THE PROFILE AND GRADING PLAN. FINALIZE WATER AND STORM SEWER INSTALLATION. CONNECT PROPOSED WATER MAIN TO EXISTING WATER MAIN SERVICE ALONG SPROUL ROAD.
19. AFTER PASSING THE REQUIRED SUBGRADE STABILITY VERIFICATION, INSTALL CONCRETE CURB. ANY AND ALL AREAS OF FAILING SUBGRADE MUST BE CORRECTED AND RE–VERIFIED PRIOR TO COMMENCING WITH INSTALLATION OF PERMANENT IMPROVEMENTS.
20. AFTER PASSING THE REQUIRED SUBGRADE STABILITY VERIFICATION, INSTALL CRUSHED AGGREGATE BASE COURSE. ANY AND ALL AREAS OF FAILING SUBGRADE MUST BE CORRECTED AND RE–VERIFIED PRIOR TO COMMENCING WITH INSTALLATION OF STONE SUBBASE. AFTER CRUSHED AGGREGATE BASE COURSE IS APPROVED BY THE TOWNSHIP ENGINEER OR THE TOWNSHIP ENGINEER'S REPRESENTATIVE IN THE FIELD, INSTALL BITUMINOUS BASE COURSE AND/OR BINDER COURSE PER THE APPROVED PLANS FOR THE PROPOSED ROAD.

(CONTINUED BELOW)

EARTHMOVING ACTIVITIES (CONTINUED)

21. REMOVE TEMPORARY CAPS ON STORM SEWER PIPE (AT INLETS AND STUBS ENTERING THE MAIN UNDERGROUND INFILTRATION BASIN) AND CONNECT ALL STORM SEWER TO THE MAIN INFILTRATION BASIN. INLET FILTERS MUST REMAIN ON ALL INLETS CONNECTING INTO THE INFILTRATION BASIN, AT ALL TIMES.
22. INSTALL SIGNAGE AND STRIPING AS INDICATED ON THE PLANS.
23. INSTALL ALL REQUIRED LANDSCAPING AND STREET TREES IMMEDIATELY UPON INSTALLATION OF TOPSOIL AND FINAL GRADING AS IT THIS PROCESS CONTINUES THROUGH THE DEVELOPMENT AND FROM LOT TO LOT. DO NOT INSTALL LANDSCAPING AT LOCATIONS WHERE ADDITIONAL CONSTRUCTION ACTIVITY/FINAL GRADING WILL OCCUR.
24. REMOVE ALL CONSTRUCTION DEBRIS AND EXCESS CUT MATERIAL FROM THE SITE IN A LAWFUL MANNER.
25. UPON COMPLETION OF THIS SEQUENCE OR TEMPORARY CESSATION OF EARTH DISTURBANCE ACTIVITIES, DISTURBED AREAS SHALL BE IMMEDIATELY STABILIZED AS INDICATED IN THE PLANTING SPECIFICATIONS LOCATED ON THE PLANS.
26. IF INSPECTION INDICATES THAT SOIL SEDIMENT HAS ENTERED ANY OF THE UNDERGROUND BASINS AND/OR STORM SEWERS, CLEANOUT AND/OR FLUSH THE INSTALLED SYSTEMS OF SEDIMENT.
27. UPON–SITE STABILIZATION (UNIFORM COVERAGE OR DENSITY OF 70% ACROSS ALL DISTURBED AREAS) AND NOTIFICATION OF THE CHESTER COUNTY CONSERVATION DISTRICT, REMOVE EROSION AND SEDIMENT CONTROL MEASURES INCLUDING BUT NOT LIMITED TO SILT FENCE, INLET PROTECTION, AND COMPOST FILTER SOCK. ANY AREA DISTURBED DURING THE REMOVAL OF EROSION AND SEDIMENT CONTROL MEASURES SHALL BE STABILIZED IMMEDIATELY AS INDICATED ON THE PLANS.
28. AFTER ALL WORK IS COMPLETED, INCLUDING HOMES, AND DEDICATION/PROJECT COMPLETION PUNCHLIST WORK IS ACCEPTED BY EAST WHITELAND TOWNSHIP/THE TOWNSHIP ENGINEER, THE OWNER/DEVELOPER MAY REQUEST INSTALLATION OF WEARING COURSE AND PERMANENT PAVEMENT STRIPING.
29. THE APPLICANT SHALL BE REQUIRED TO SUBMIT A COMPLETED NOTICE OF TERMINATION TO THE CHESTER COUNTY CONSERVATION DISTRICT.

EARTHMOVING ACTIVITIES (CONTINUED)

III. LOT/DWELLING CONSTRUCTION SEQUENCE

THIS SEQUENCE DESCRIBES THE ORDER OF WORK TO BE COMPLETED ON EACH LOT AT THE DESIGNATED TIME INDICATED IN THE "SEQUENCE OF SITE CONSTRUCTION" (IDENTIFIED ON THIS SHEET).

1. INSTALL ON–LOT STONE TRACKING PAD AT EACH LOT DRIVEWAY. DO NOT INSTALL LOT INFILTRATION BASINS AT THIS TIME. THE AREA OF EACH INFILTRATION BASIN MUST REMAIN PROTECTED WITH TREE PROTECTION FENCE AT ALL TIMES DURING HOUSE CONSTRUCTION AND PLACEMENT OF TOPSOIL ON EACH LOT. TREE PROTECTIVE FENCING AROUND LOT INFILTRATION FACILITIES IS ONLY TO BE REMOVED DURING CONSTRUCTION OF ON LOT INFILTRATION FACILITIES.
2. INSTALL TREE PROTECTIVE FENCE (TREES TO REMAIN AND AROUND LOT INFILTRATION FACILITIES) AND COMPOST FILTER SOCK NECESSARY FOR EROSION PROTECTION AS NEEDED.
3. PROVIDE LAYOUT OF PROPOSED DWELLING, UTILITY SERVICES AND DRIVEWAYS. BEGIN CONSTRUCTION OF DWELLING. PERFORM BULK GRADING.
4. INSTALL E–ONE PUMP. CONNECT BUILDING SEWER TO PUMP. REMOVE TEMPORARY CAP FROM THE LATERAL AND COMPLETE CONSTRUCTION OF THE ON–LOT PORTION OF THE LATERAL. CONNECT LATERAL TO PUMP.
5. INSTALL REMAINING UTILITY IMPROVEMENTS FROM UTILITY STUBS INCLUDING, BUT NOT LIMITED TO, SANITARY SEWER, WATER, ELECTRIC, TELEPHONE, CABLE TV, ETC.
6. UPON COMPLETION OF EACH DWELLING AND ASSOCIATED UTILITIES/IMPROVEMENTS, REMOVE THE STONE TRACKING PAD ON THE LOT, INSTALL DRIVEWAY STONE SUBBASE, THEN DRIVEWAY BITUMINOUS BASE/BINDER COURSE.
7. INSTALL TOPSOIL ON THE LOT (TOPSOIL IS TO BE REDISTRIBUTED TO A DEPTH OF EIGHT (8) INCHES); INSTALL LOT SWALES (AS SHOWN ON THE EROSION CONTROL PLAN DETAIL). FINAL GRADE, RAKE, SEED AND STABILIZE WITH STRAW MULCH AND EROSION CONTROL MATTING WHERE SHOWN ON THE EROSION CONTROL PLAN.
8. THE TOWNSHIP ENGINEER MUST BE NOTIFIED A MINIMUM OF 48–HOURS IN ADVANCE OF COMMENCEMENT OF THE INFILTRATION FACILITY CONSTRUCTION TO ARRANGE REQUIRED INSPECTION. ALSO NOTE, A LICENSED PROFESSIONAL OR THEIR DESIGNEE MAY BE REQUIRED TO BE PRESENT TO INSPECT THE CONSTRUCTION OF THE BASIN PURSUANT TO NPDES PERMIT REQUIREMENTS. INSPECTION BY THE TOWNSHIP ENGINEER (OR THEIR DESIGNEE) WILL NOT FULFILL ANY RESPONSIBILITIES OF THE PERMITTEE RELATED TO THE NPDES PERMIT.
9. UPON ACHIEVING 70% PERMANENT STABILIZATION ON THE LOT, BEGIN CONSTRUCTION OF ON–LOT, UNDERGROUND INFILTRATION BASINS. THE BOTTOM OF THE INFILTRATION BASIN SHALL BE SCARIFIED PRIOR TO PLACEMENT OF GEOTEXTILE AND AGGREGATE. IF ANY UNFAVORABLE CONDITIONS ARE ENCOUNTERED DURING THE INSTALLATION OF THE INFILTRATION SYSTEMS (I.E. GROUNDWATER AND/OR BEDROCK, ETC.), THE CONTRACTOR SHALL IMMEDIATELY NOTIFY THE TOWNSHIP ENGINEER AND THE RESPONSIBLE DESIGN ENGINEER TO DETERMINE IF THE FACILITY MUST BE RELOCATED TO A MORE SUITABLE LOCATION ON THE PROPERTY.
10. DURING CONSTRUCTING OF LOT INFILTRATION FACILITIES, CONTRACTOR SHALL REMOVE TREE PROTECTION FENCING AND ONLY USE EQUIPMENT THAT WILL NOT COMPACT THE LOT INFILTRATION FACILITIES. ALL CLEANOUT COVERS, ROUND GRATED INLET COVERS AND COLLECTION INLET COVERS ASSOCIATED WITH THE LOT INFILTRATION FACILITIES SHALL BE WRAPPED WITH GEO TEXTILE FILTER FABRIC TO KEEP SEDIMENT OUT OF THE ON LOT SYSTEMS. IN ADDITION, COMPOST FILTER SOCK SHALL BE PLACED AROUND ALL CLEANOUTS, ROUND GRATES INLETS AND COLLECTION INLETS UNTIL ALL TRIBUTARY DRAINAGE AREAS TO EACH LOT INFILTRATION FACILITY IS STABLE. AS INDICATED ON THE PLAN, CONNECT ROOF LEADERS TO ON LOT INFILTRATION FACILITIES. NOTE THAT NOT ALL ON ROOF LEADER SYSTEMS WILL BE CONNECTED TO INFILTRATION FACILITIES.
11. UPON COMPLETION OF THE UNDERGROUND INFILTRATION FACILITY, COMPLETE INSTALLATION OF THE AMENDED SOILS AS INDICATED ON PLAN.
12. AS NEEDED, TREE PROTECTION FENCE SHALL BE PLACED AROUND CONSTRUCTED LOT INFILTRATION SYSTEMS IF ANY MISCELLANEOUS CONSTRUCTION ACTIVITY IS PROPOSED ADJACENT TO LOT INFILTRATION FACILITIES.

NOTE: REFER TO PCSM AND LANDSCAPING PLAN FOR AMENDED SOIL AND LANDSCAPE RESTORATION DETAILS/LOCATIONS

APPLICANT/EQUITABLE OWNER:
WOODSTONE DEVELOPMENT COMPANY, LP
70 POTTSTOWN PIKE, SUITE 100
CHESTER SPRINGS, PA 19425

SITE ADDRESS:
110 SPROUL ROAD
MALVERN, PA 19355

NOTE: ROOF TOP DISCONNECT CREDIT WAS TAKEN FOR LOTS 1, 4, 8, 9, 10, 11, 12, 13, 14 AND PARTIAL ROOF TOP DISCONNECT CREDIT FOR LOTS 6. STORMWATER ROOF RUNOFF FOR LOTS 3, 5 AND 7 MUST BE CONVEYED VIA A ROOF LEADER COLLECTION SYSTEM TO THE UNDERGROUND INFILTRATION BASIN ON THEIR INDIVIDUAL LOTS. THE ROOF LEADER SYSTEM SHOWN IS SCHEMATIC. REFER TO ROOF LEADER SYSTEM DETAIL FOR CONSTRUCTION SPECIFICATIONS. ALL ROOF RUNOFF HAS BEEN ACCOUNTED FOR AND WILL BE DIRECTED TO EITHER INDIVIDUAL ON LOT BEDS OR THE MAIN BED.

ABACT NOTE: THE ABACT E&S PLAN CONSISTS OF POLLUTION PREVENTION (PPC PLANS AND CHANNELS LINED WITH PERMANENT VEGETATION), INSTALLATION OF AMENDED SOILS AND COMPOST FILTER SOCK. THE ABACT PCSM PLAN CONSISTS OF INFILTRATION PRACTICES, DISCONNECTION OF ROOF DRAINAGE VEGETATIVE SWALES AND INSTALLATION OF AMENDED SOILS

PROPOSED BMP'S:
- INFILTRATION BEDS (#1, #3, #4/5, #6/7, #8/9/10, #11 AND MAIN BED)
- ROOF TOP DISCONNECT (VARIOUS LOTS INDICATED ON THIS PLAN)
- VEGETATIVE SWALE, BMP 6.4.8 (#1, #4/5. #4–2, #5, #8–9, #10 AND #12/13)
- LANDSCAPE RESTORATION, BMP 6.7.2 (AMENDED SOILS AND MEADOW MIX – ERNMX–180 SEED)
- SOIL AMENDMENT, BMP 6.7.3 (AMENDED SOILS FOR INFILTRATION BEDS LISTED ABOVE)

GRAPHIC SCALE
40 0 20 40 80 160
(IN FEET)
1 inch = 40 ft.

PROJECT SERIAL No. : 20182490802

BEFORE YOU DIG ANYWHERE IN... PENNSYLVANIA

STOP! CALL 1–800–242–1776 (TOLL FREE)

PA LAW REQUIRES 3 WORKING DAYS NOTICE FOR CONSTRUCTION PHASE AND 10 WORKING DAYS NOTICE IN DESIGN STAGE PENNSYLVANIA ONE CALL SYSTEM, Inc.

ALL TRENCHING, SHEETING AND SHORING SHALL BE IN STRICT ACCORDANCE WITH OSHA STANDARDS.

ACT NUMBER 287 OF 1974 as AMENDED UTILITY USER LIST

AQUA PENNSYLVANIA, INC.
700 W. SPROUL ROAD
SPRINGFIELD, PA 19064
CONTACT: JOSEPH M. CILIBERTI
PHONE: (484) 470–1075

COMCAST CABLE COMM., INC.
110 SPRINGBROOKE BLVD.
ASTON, PA 19014
CONTACT: DAN CLARK
PHONE: (877) 537–8411

EAST WHITELAND TOWNSHIP
209 CONESTOGA ROAD
MALVERN, PA 19355
CONTACT: TERRY H. WOODMAN
PHONE: (610) 648–0600

PECO ENERGY
3628 HORIZON DRIVE, DELONFILE
KING OF PRUSSIA, PA 19406
CONTACT: SUSAN TERREY
PHONE: (215) 956–3182

VALLEY FORGE SEWER AUTHORITY
333 PAWLING ROAD
PHOENIXVILLE, PA 19460
CONTACT: STEPHEN YUHAS
PHONE: (610) 983–9684

VERIZON PENNSYLVANIA, INC.
900 RACE STREET, 6TH FLOOR
PHILADELPHIA, PA 19107
CONTACT: JOSEPH SCELSA
PHONE: (610) 280–5586

NOTE: AN INDIVIDUAL LOT GRADING PLOT PLAN MUST BE SUBMITTED TO THE TOWNSHIP FOR EACH LOT AND MUST INCLUDE GRADING, STORMWATER MANAGEMENT FACILITIES, ROOF LEADER SYSTEM, STORM SEWER, ON–LOT SEEPAGE BASIN, LOT–SPECIFIC DWELLING FOOTPRINT, FIRST FLOOR, BASEMENT FLOOR, GARAGE FLOOR ELEVATIONS, BUILDING SETBACKS, EROSION CONTROL DESIGN AND LOT SPECIFIC IMPERVIOUS SURFACE TABULATION. SUCH PLOT PLANS MUST BE APPROVED BY THE TOWNSHIP PRIOR TO COMMENCEMENT OF CONSTRUCTION OF EACH DWELLING AND LOT IMPROVEMENTS.

NOTE: THE LOCATION OF PERIMETER CONTROLS IS SHOWN FOR LOCATION PURPOSES. CONTRACTOR SHALL INSTALL ALL ENDS OF THE PERIMETER CONTROL SECTION UP SLOPE AT A 45 DEGREE ANGLE FOR A MINIMUM OF 8 FEET.

A COPY OF THESE EROSION AND SEDIMENTATION CONTROL PLAN MUST BE POSTED AT THE CONSTRUCTION SITE AT ALL TIMES IN ACCORDANCE WITH STATE LAW.

INFILTRATION BASIN CONSTRUCTION NOTE: THE BOTTOM OF ALL INFILTRATION BASINS SHALL BE SCARIFIED PRIOR TO PLACEMENT OF GEOTEXTILE FABRIC AND AGGREGATE.

ORIGINAL PLANS BEAR A REGISTRATION SEAL IN RED INK.

COMMONWEALTH OF PENNSYLVANIA — REGISTERED PROFESSIONAL ENGINEER — ERIC J. JANETKA — No. 050549–E

KELLY & CLOSE ENGINEERS
CONSULTING ENGINEERS & SURVEYORS
The Summit at Brandywine
1786 Wilmington Pike/Suite 300
Glen Mills, Pennsylvania 19342
610.358.9363 fax 610.358.9376

REV.	DATE	DESCRIPTION	BY
3	2/8/2019	REVISE PLAN PER TOWNSHIP CONSULTANT REVIEWS, NPDES PERMIT REVIEW	E.J.J.
2	10/5/2018	REVISED GRADING; REVISED SANITARY SEWER DESIGN; REVISED SWM	E.J.J.
1	9/10/2014	REVISED PER TWP 8–11–14 AND 8–18–14 REVIEW LETTERS	E.J.J.

date:	7/21/2014
scale:	1" = 40'
drawn by:	M.J.B.
checked by:	E.J.J.
dwg. name:	F–EnS.dwg
project no.:	N/A

SHIRTZ FARM
110 SPROUL ROAD
EAST WHITELAND TOWNSHIP
CHESTER COUNTY, PENNSYLVANIA

EROSION AND SEDIMENTATION CONTROL PLAN

This document and all information and work product represented by and contained herein, is the sole and exclusive property of James C. Kelly & Associates, Inc., t/a Kelly & Close Engineers. The information contained herein is licensed only for limited use by the intended recipient, and no license, permission or authority is extended, directly or implied, to any party without express written permission of James C. Kelly & Associates, Inc.

Copyright, 2015, James C. Kelly & Associates, Inc. All rights reserved

OWNER / OPERATOR WILL BE RESPONSIBLE FOR THE PROPER CONSTRUCTION, STABILIZATION, AND MAINTENANCE OF ALL EROSION AND SEDIMENTATION CONTROLS AND RELATED ITEMS INCLUDED WITHIN THESE PLANS.

1. THE PROJECT SITE SHALL AT ALL TIMES BE AVAILABLE FOR INSPECTION BY AUTHORIZED OFFICERS AND EMPLOYEES OF THE EAST WHITELAND TWP AND CHESTER COUNTY CONSERVATION DISTRICT.
2. NOTIFY THE EAST WHITELAND TOWNSHIP ENGINEER AND ARRANGE A PRE-CONSTRUCTION MEETING FOR ALL INVOLVED PARTIES (INCLUDING EAST WHITELAND TWP, PADEP, APPLICANT, ENGINEER AND ETC.).
3. NOTIFY EAST WHITELAND TWP AND PADEP AT LEAST 48 HOURS PRIOR TO ANY EARTH DISTURBANCE ACTIVITIES.
4. CONSTRUCTION OPERATIONS SHALL BE CARRIED OUT IN A MANNER SUCH AT ALL EROSION AND AIR/WATER POLLUTION IS MINIMIZED. STATE AND LOCAL LAWS CONCERNING ABATEMENT SHALL BE FOLLOWED.
5. SHOULD UNFORESEEN EROSION CONDITIONS DEVELOP DURING CONSTRUCTION, THE CONTRACTOR SHALL TAKE ACTION TO REMEDY SUCH CONDITIONS AND TO PREVENT DAMAGE TO ADJACENT PROPERTIES AND STREAMS IN ACCORDANCE WITH PADOT 408 SECTION 845. STOCKPILES OF CRUSHED STONE AND MULCH MUST BE MAINTAINED AT THE SITE IN READINESS TO DEAL IMMEDIATELY WITH EMERGENCY PROBLEMS OF EROSION.
6. EROSION AND SEDIMENTATION CONTROLS MUST BE CONSTRUCTED, STABILIZED AND FUNCTIONAL BEFORE GENERAL SITE DISTURBANCE WITHIN THE TRIBUTARY AREA OF THOSE CONTROLS BEGINS.
7. ONLY LIMITED UP SLOPE DISTURBANCE WILL BE PERMITTED TO PROVIDE ACCESS TO SEDIMENT TRAPS AND CHANNELS OF CONVEYANCE FOR GRADING AND ACQUIRING BORROW TO CONSTRUCT THOSE CONTROLS.
8. THE PERMITEE SHALL NOTIFY EAST WHITELAND TWP AND PADEP IMMEDIATELY PRIOR TO ANY CESSATION IN EARTHMOVING ACTIVITIES.
9. UNTIL THE SITE IS STABILIZED, ALL EROSION AND SEDIMENTATION CONTROLS MUST BE PROPERLY MAINTAINED. MAINTENANCE MUST INCLUDE INSPECTIONS OF ALL EROSION AND SEDIMENTATION CONTROLS AFTER EACH STORM EVENT AND ON A WEEKLY BASIS. ALL PREVENTATIVE AND REMEDIAL MAINTENANCE WORK, INCLUDING CLEAN OUT, REPAIR, REPLACEMENT, REGRADING, RESEEDING, REMULCHING AND RENETTING, MUST BE PERFORMED IMMEDIATELY.
10. EROSION AND SEDIMENTATION CONTROLS SHALL BE MAINTAINED AS FOLLOWS: ACCUMULATED SILT SHALL BE REMOVED ALONG SILT FENCING, REGRADED, AND STABILIZED ELSEWHERE ON THE SITE. SILT SHALL ALSO BE REMOVED FROM THE BASIN AT THE CLEANOUT ELEVATIONS. THE SILT SHALL BE SPREAD ELSEWHERE ON THE SITE AND SEEDED.
11. AFTER FINAL STABILIZATION HAS BEEN ACHIEVED, TEMPORARY EROSION AND SEDIMENTATION CONTROLS MUST BE REMOVED. AREAS DISTURBED DURING THE REMOVAL OF THE CONTROLS MUST BE STABILIZED.
12. ANY DISTURBED AREA, ON WHICH ACTIVITY HAS CEASED FOR AN EXTENDED AMOUNT OF TIME, MUST BE SEEDED AND MULCHED IMMEDIATELY. DURING NON-GERMINATING PERIODS, MULCH MUST BE APPLIED AT RECOMMENDED RATES
13. DISTURBED AREAS WHICH ARE NOT AT FINISH GRADE AND WHICH WILL BE RE-DISTURBED WITHIN ONE YEAR MAY BE SEEDED AND MULCHED WITH A QUICK GROWING TEMPORARY SEED MIXTURE AND MULCH. DISTURBED AREAS WHICH ARE EITHER AT FINISH GRADE OR WILL NOT BE RE-DISTURBED WITHIN ONE YEAR MUST BE SEEDED WITH A PERMANENT SEED MIXTURE AND MULCHED.
14. SHOULD ANY MEASURES CONTAINED WITHIN THIS PLAN PROVE TO BE INCAPABLE OF ADEQUATELY REMOVING SEDIMENT FROM ON-SITE FLOWS PRIOR TO THE DISCHARGE OF OR STABILIZING OF SURFACES INVOLVED, ADDITIONAL MEASURES MUST BE IMPLEMENTED IMMEDIATELY BY THE OWNER/ DEVELOPER TO ELIMINATE SUCH PROBLEMS.
15. THE LIMITS OF WORK SHOWN ON THIS PLAN ARE THE REAL EXTENT REQUIRED FOR CONSTRUCTION. THE CONTRACTOR SHALL ADHERE TO THESE LIMITS IN MINIMIZING DISTURBED LAND, AND ALL CONSTRUCTION SHALL BE CONDUCTED WITHIN THESE LIMITS.
16. TOPSOIL TAKEN FROM CONSTRUCTION AREAS SHALL BE SEEDED WITH A VEGETATIVE COVER AND STOCKPILED FOR REUSE IN FINISH GRADING. STOCKPILE HEIGHTS SHALL NOT EXCEED 35 FEET. STOCKPILE SLOPES SHALL BE 2:1 OR FLATTER. SILT FENCING SHALL BE INSTALLED ON THE LOW SIDE OF THE PILE. THERE SHALL BE NO EARTH DISTURBANCE WITHIN THE STOCKPILE AREA.
17. FILLS GREATER THAN 3:1 SLOPE AND CUTS GREATER THAN 2-1/2:1 SHALL BE SEEDED AND MULCHED, AND PROTECTED WITH EROSION CONTROL MATTING (SEE INSTALLATION INSTRUCTIONS).
18. CHANNELS AND STOCKPILES MUST BE SEEDED AND MULCHED IMMEDIATELY.
19. GRADED AREAS ARE TO BE TEMPORARILY SEEDED AND MULCHED IMMEDIATELY FOLLOWING EARTHMOVING PROCEDURES. TEMPORARY SEED SHALL BE ANNUAL RYE GRASS APPLIED AT THE RATES SPECIFIED. MULCH SHALL BE HAY OR STRAW APPLIED AT THE RATE OF AT LEAST 3 TONS PER ACRE.
20. LIME SHALL BE APPLIED TO ALL TEMPORARILY SEEDED AREAS AT A MINIMUM RATE AS SPECIFIED.
21. ALL TEMPORARILY SEEDED AREAS SHALL HAVE 5-5-5 FERTILIZER APPLIED AT THE MINIMUM RATES SPECIFIED.
22. ESTABLISH PERMANENT SEEDING AS SOON AS POSSIBLE AFTER FINAL GRADING IS COMPLETED. PERMANENT SEEDING SHALL BE AT THE RATES SPECIFIED. FERTILIZER AND LIME SHALL BE APPLIED AT THE MINIMUM RATES SPECIFIED.
23. PERMANENTLY SEEDED AREAS SHALL HAVE HAY OR STRAW APPLIED AT THE RATE OF AT LEAST 3 TONS PER ACRE.
24. ANY AREAS WHERE HYDROSEED IS USED, MULCH IS NEEDED AT A MINIMUM RATE OF 3 TONS PER ACRE.
25. SILT FENCING IS TO BE MAINTAINED, AND REPLACED IF NECESSARY, DURING THE ENTIRE CONSTRUCTION PERIOD UNTIL A PERMANENT VEGETATIVE COVER WITHIN THE TRIBUTARY AREA IS ESTABLISHED.
26. THERE IS TO BE NO EARTH DISTURBANCE OR VEGETATIVE CLEARING IN AREAS OF STAKED (OR FENCED) WETLANDS. EARTH DISTURBANCE WITHIN THESE AREAS WITHOUT THE REQUIRED PERMITS WILL RESULT IN POTENTIAL VIOLATION OF COMMONWEALTH AND FEDERAL WETLANDS REGULATIONS.
27. DUST CONTROL SHALL BE PROVIDED BY THE CONTRACTOR AT ALL TIMES DURING CONSTRUCTION.
28. CONSTRUCTION VEHICLES LEAVING THE SITE SHALL NOT DEPOSIT ANY MATERIAL OUTSIDE OF THE PROJECT SITE BOUNDARIES AND/OR A PUBLIC RIGHT-OF-WAY. ANY MATERIAL DEPOSITED SHALL BE IMMEDIATELY REMOVED.
29. IF ANY SIGNIFICANT CHANGES ARE TO BE MADE TO THE EROSION AND SEDIMENTATION CONTROL PLAN, THE BUILDER OR LANDOWNER MUST CONTACT THE THE EAST WHITELAND TOWNSHIP ENGINEER FOR THE ADEQUACY OF THESE CHANGES.
30. UNTIL THE SITE IS STABILIZED, ALL EROSION AND SEDIMENTATION BMP'S MUST BE MAINTAINED PROPERLY. MAINTENANCE MUST INCLUDE INSPECTIONS OF ALL EROSION AND SEDIMENTATION BMP'S AFTER EACH RUNOFF EVENT AND ON A WEEKLY BASIS. ALL SITE INSPECTIONS WILL BE DOCUMENTED IN AN INSPECTION REPORT LOG KEPT FOR THIS PURPOSE. THE COMPLIANCE ACTIONS AND THE DATE, TIME AND NAME WILL BE KEPT ON THE SITE AT ALL TIMES AND MADE AVAILABLE TO THE DISTRICT UPON REQUEST.
31. ALL PREVENTATIVE AND REMEDIAL MAINTENANCE WORK, INCLUDING CLEAN OUT, REPAIR, REPLACEMENT, REGRADING, RESEEDING, REMULCHING AND RENETTING, MUST BE PERFORMED IMMEDIATELY. IF EROSION AND SEDIMENTATION BMP'S FAIL TO PERFORM AS EXPECTED, REPLACEMENT BMP'S OR MODIFICATIONS OF THOSE INSTALLED WILL BE REQUIRED.
32. WHERE BMP'S ARE FOUND TO FAIL TO ALLEVIATE EROSION OR SEDIMENT POLLUTION THE PERMITTEE OR CO-PERMITTEE SHALL INCLUDE THE FOLLOWING INFORMATION:
    - THE LOCATION AND SEVERITY OF THE BMP'S FAILURE AND ANY POLLUTION EVENTS.
    - ALL STEPS TAKEN TO, REDUCE, ELIMINATE AND PREVENT THE RECURRENCE OF THE NON-COMPLIANCE.
    - THE TIME FRAME TO CORRECT THE NON-COMPLIANCE, INCLUDING THE EXACT DATES WHEN THE ACTIVITY WILL RETURN TO COMPLIANCE.
33. THE CONTRACTOR IS ADVISED TO BECOME THOROUGHLY FAMILIAR WITH THE PROVISIONS OF APPENDIX 64, EROSION CONTROL RULES AND REGULATIONS, TITLE 25, PART 1, DEPARTMENT OF ENVIRONMENTAL PROTECTION, SUBPART C, PROTECTION OF NATURAL RESOURCES, ARTICLE III, WATER RESOURCES, CHAPTER 102, EROSION CONTROL.
34. THE OPERATOR SHALL REMOVE FROM THE SITE, RECYCLE, OR DISPOSE OF ALL BUILDING MATERIALS AND WASTES IN ACCORDANCE WITH THE DEPARTMENT'S SOLID WASTE MANAGEMENT REGULATIONS AT 25 PA. CODE 260.1 ET SEQ., 271.1 ET SEQ., AND 287.1 ET SEQ. THE CONTRACTOR SHALL NOT ILLEGALLY BURY, DUMP, OR DISCHARGE ANY BUILDING MATERIAL OR WASTES AT THE SITE.
35. SEDIMENT MUST BE REMOVED FROM STORMWATER INLETS AND INLET PROTECTION AFTER EACH RUNOFF EVENT.
36. ALL PUMPING OF SEDIMENT LADEN WATER OR POTENTIALLY SEDIMENT LADEN WATER SHALL BE THROUGH A SEDIMENT CONTROL BMP, SUCH AS A PUMPED WATER FILTER BAG DISCHARGING OVER NON-DISTURBED AREAS.
37. PROTECTION OF EXISTING TREES AND SHRUBS SHALL BE TAKEN BY THE CONTRACTOR TO ELIMINATE UNNECESSARY DAMAGE. THE CONTRACTOR SHALL MAKE ALL REASONABLE EFFORTS TO PRESERVE TREES.
38. AREAS THAT HAVE NO WORK PROPOSED WITHIN WOODED AREAS ARE TO REMAIN UNDISTURBED BY THE CONTRACTOR.
39. EAST WHITELAND TWP AND PADEP SHALL BE NOTIFIED WHEN WORK IS COMPLETED.
40. AN AREA SHALL BE CONSIDERED TO HAVE ACHIEVED FINAL STABILIZATION WHEN IT HAS A MINIMUM UNIFORM 70% PERENNIAL VEGETATIVE COVER OR OTHER PERMANENT NON-VEGETATIVE COVER WITH A DENSITY SUFFICIENT TO RESIST ACCELERATED SURFACE EROSION AND SUBSURFACE CHARACTERISTICS SUFFICIENT TO RESIST SLIDING AND OTHER MOVEMENTS. IMMEDIATELY AFTER EARTH DISTURBANCE ACTIVITIES CEASE, THE OPERATOR SHALL STABILIZE ANY AREAS DISTURBED BY THE ACTIVITIES. DURING NON-GERMINATING PERIODS, MULCH MUST BE APPLIED AT THE SPECIFIED RATES. DISTURBED AREAS WHICH ARE NOT AT FINISHED GRADE AND WHICH WILL BE REDISTURBED WITHIN 1 YEAR MUST BE STABILIZED IN ACCORDANCE WITH THE TEMPORARY VEGETATIVE STABILIZATION SPECIFICATIONS. DISTURBED AREAS WHICH ARE AT FINISHED GRADE OR WHICH WILL NOT BE REDISTURBED WITHIN 1 YEAR MUST BE STABILIZED IN ACCORDANCE WITH THE PERMANENT STABILIZATION SPECIFICATIONS.4
41. IF ANY UNFAVORABLE CONDITIONS ARE ENCOUNTERED DURING THE INSTALLATION OF THE SEEPAGE BED/INFILTRATION SYSTEMS (I.E. GROUNDWATER AND/OR BEDROCK, ETC.), THE CONTRACTOR SHALL IMMEDIATELY NOTIFY THE TOWNSHIP ENGINEER AND THE RESPONSIBLE DESIGN ENGINEER TO DETERMINE IF THE FACILITY MUST BE RELOCATED TO A MORE SUITABLE LOCATION ON THE PROPERTY.
42. UNTIL THE SITE IS STABILIZED, ALL EROSION AND SEDIMENTATION BMPS MUST BE MAINTAINED PROPERLY. MAINTENANCE MUST INCLUDE INSPECTIONS OF ALL EROSION AND SEDIMENTATION BMP'S AFTER EACH RUNOFF EVENT AND ON A WEEKLY BASIS. ALL SITE INSPECTIONS WILL BE DOCUMENTED IN AN INSPECTION LOG KEPT FOR THIS PURPOSE. THE COMPLIANCE ACTIONS AND THE DATE, TIME AND NAME OF THE PERSON CONDUCTING THE INSPECTION. THE INSPECTION LOG WILL BE KEPT ON SITE AT ALL TIMES AND MADE AVAILABLE TO THE DISTRICT UPON REQUEST. ALL PREVENTIVE AND REMEDIAL MAINTENANCE WORK, INCLUDING CLEAN OUT, REPAIR, REPLACEMENT, REGRADING, RESEEDING, REMULCHING AND RENETTING, MUST BE PREFORMED IMMEDIATELY. IF EROSION AND SEDIMENTATION BMPS FAIL TO PERFORM AS EXPECTED, REPLACEMENT BMPS OR MODIFICATIONS OF THOSE INSTALLED WILL BE NEEDED. WHERE BMPS ARE FOUND TO FAIL TO ALLEVIATE EROSION OR SEDIMENT POLLUTION, THE PERMITTEE OR CO-PERMITTEE SHALL INCLUDE THE FOLLOWING INFORMATION:
    A. THE LOCATION AND SEVERITY OF THE BMP'S FAILURE AND ANY POLLUTION EVENTS.
    B. ALL STEPS TAKEN TO REDUCE, ELIMINATE AND PREVENT THE RECURRENCE OF THE NON-COMPLIANCE.
    C. THE TIME FRAME TO CORRECT THE NON-COMPLIANCE, INCLUDING THE EXACT DATES WHEN THE ACTIVITY WILL RETURN TO COMPLIANCE. AFTER FINAL SITE STABILIZATION HAS BEEN ACHIEVED, TEMPORARY EROSION AND SEDIMENT BMPS MUST BE REMOVED. AREAS DISTURBED DURING REMOVAL OF THE BMPS MUST BE STABILIZED IMMEDIATELY.
43. PRIOR TO INITIATING ANY REVISION TO THE APPROVED EROSION AND SEDIMENT CONTROL PLAN OR REVISIONS TO OTHER PLANS WHICH MAY IMPACT THE EFFECTIVENESS OF THE APPROVED EROSION AND SEDIMENTATION CONTROL PLAN, THE OPERATOR MUST RECEIVE APPROVAL OF THE REVISIONS FROM THE CHESTER COUNTY CONSERVATION DISTRICT. THE OPERATOR SHALL ASSURE THAT THE APPROVED EROSION AND SEDIMENT CONTROL PLAN IS PROPERLY AND COMPLETELY IMPLEMENTED. IMMEDIATELY UPON DISCOVERING UNFORESEEN CIRCUMSTANCES POSING THE POTENTIAL FOR ACCELERATED EROSION AND/OR SEDIMENT POLLUTION, THE OPERATOR SHALL IMPLEMENT APPROPRIATE BEST MANAGEMENT PRACTICES TO ELIMINATE POTENTIAL FOR ACCELERATED EROSION AND/OR SEDIMENT POLLUTION.

SOIL TYPE USE LIMITATIONS AND RESOLUTIONS

1. SOIL TYPES POORLY SUITED AS SOURCES OF TOPSOIL RESTRICT OR PLACE CONDITIONS ON PLANNING VEGETATIVE STABILIZATION. ACIDIC, LOW FERTILITY, EXCESSIVE DRYNESS AND EXCESSIVE WETNESS LIMIT PLANT GROWTH.

   RESOLUTIONS: IDENTIFYING AND RESOLVING CHARACTERISTICS, THAT RENDER THE SOIL TYPES POORLY, SUITED AS TOPSOIL.

2. ACIDIC SOIL TYPES EXHIBITING PH REACTION VALUES LOWER THAN ABOUT 5.5, LIMIT VEGETATIVE STABILIZATION. SOIL TESTS MIGHT BE NECESSARY TO DETERMINE SITE SPECIFIC PH REACTION.

   RESOLUTIONS: APPLYING LIME CONSISTENT WITH RATES DETERMINED BY SOIL TESTING; SELECTING VEGETATIVE SPECIES TOLERANT TO ACIDIC SOIL CONDITIONS; AND IMPLEMENTING COMBINATIONS OF THESE AND/OR OTHER METHODS. SPECIFIC TOLERANCE INFORMATION IS PROVIDED IN TABLE 1 OF THE EROSION CONTROL & CONSERVATION PLANTINGS ON NONCROPLAND PUBLISHED BY PENN STATE.

3. LOW FERTILITY SOIL TYPES LACKING IN SUFFICIENT AMOUNTS OF ESSENTIAL PLANT NUTRIENTS SUCH AS: NITROGEN, PHOSPHOROUS, POTASSIUM, SULFER, MAGNESIUM, CALCIUM, IRON, MANGANESE, BORON, CHLORINE, ZINC, COPPER AND MOLYBDENUM, LIMIT VEGETATION STABILIZATION. SOIL TESTS MIGHT BE NECESSARY TO DETERMINE SITE SPECIFIC SOIL FERTILITY.

   RESOLUTIONS: INCORPORATING SOIL NUTRIENTS CONSISTENT WITH RATES DETERMINED BY SOIL TESTING; SELECTIVE VEGETATIVE SPECIES TOLERANT TO LOW FERTILITY SOIL CONDITIONS, AND IMPLEMENTING COMBINATIONS OF THESE AND OR OTHER METHODS. SPECIFIC TOLERANCE INFORMATION IS PROVIDED IN TABLE 1 OF THE EROSION CONTROL & CONSERVATION PLANTINGS ON NONCROPLAND PUBLISHED BY PENN STATE.

4. ERODIBLE SOIL TYPES EXHIBITING K VALUES GREATER THAN 0.36 OR PLASTICITY INDEX VALUES LOWER THAN 10, LIMIT VEGETATIVE STABILIZATION OF CHANNELS.

   RESOLUTIONS: TEMPORARY CHANNEL LINING, PROVIDING PERMANENT CHANNEL LINING, DECREASING CHANNEL GRADE, INCREASING CHANNEL WIDTH, SELECTING VEGETATIVE WITH GREATER RETARDANCE, SELECTING PERMANENT LININGS OTHER THAN GRASSES, AND IMPLEMENTING COMBINATION OF THESE AND/OR METHODS. VEGETATIVE RETARDANCE INFORMATION IS PROVIDED IN TABLES 6 AND 7 OF THE EROSION AND SEDIMENT POLLUTION CONTROL MANUAL PUBLISHED BY PADEP.

5. WET SOIL TYPES HAVE EXCESSIVE ROOT ZONE AND SOIL MOISTURES. SOME SOIL SURVEYS INDICATE WETNESS, HIGH WATER TABLE AND FLOODING. THIS INDICATOR IS AFFECTED BY SOIL DISTURBANCE.

   RESOLUTIONS: SELECTING VEGETATIVE SPECIES TOLERANT TO WET CONDITIONS, TILING VEGETATIVE AREAS, AND IMPLEMENTING COMBINATIONS OF THESE AND/OR OTHER METHODS. SPECIFIC TOLERANCE INFORMATION IS PROVIDED IN TABLE 1 OF THE EROSION CONTROL & CONSERVATION PLANTINGS ON NONCROPLAND PUBLISHED BY PENN STATE.

6. DRY SOIL TYPES LACK SUFFICIENT ROOT ZONE SOIL MOISTURES. THIS INDICATOR IS AFFECTED BY SOIL DISTURBANCE.

   RESOLUTIONS: SELECTING VEGETATIVE SPECIES TOLERANT TO DRY CONDITIONS, IRRIGATING VEGETATED AREAS AND IMPLEMENTING COMBINATION OF THESE AND/OR OTHER METHODS. SPECIFIC TOLERANCE INFORMATION IS PROVIDED IN TABLE 1 OF THE EROSION CONTROL & CONSERVATION PLANTINGS ON NONCROPLAND PUBLISHED BY PENN STATE.

7. SOIL TYPES SUSCEPTIBLE TO SINKHOLE AND SOLUTION CHANNEL/CHAMBER FORMATION POSE LIMITATIONS ON LOCATING RESERVOIR AREAS OF SEDIMENT BASINS, SEDIMENT TRAPS, STORMWATER RETENTION BASINS, AND STORMWATER DETENTION BASINS.

   RESOLUTIONS: LOCATING THOSE FACILITIES ON OTHER SOIL TYPES, LINING RESERVOIR AREAS WITH IMPERMEABLE LININGS, LIMITING STANDING WATER DEPTHS, LIMITING RETENTION TIMES AND IMPLEMENTING COMBINATIONS OF THESE AND/OR OTHER METHODS.

8. SOIL TYPES THAT EXHIBIT INSTABILITY IN POND EMBANKMENTS OR SUSCEPTIBILITY TO PIPING AND SEEPING POSE LIMITATIONS ON PLANNING EMBANKMENTS OF SEDIMENT BASINS, SEDIMENT TRAPS, STORMWATER RETENTION BASINS AND STORMWATER DETENTION BASINS.

   RESOLUTIONS: IMPORTING OTHER SOIL FOR EMBANKMENT OF THOSE FACILITIES, LOCATING THOSE FACILITIES ON OTHER SOIL TYPES, LIMITING EMBANKMENT SLOPE STEEPNESS AND IMPLEMENTING COMBINATIONS OF THESE AND/OR OTHER METHODS.

9. SOILS THAT ARE DIFFICULT TO COMPACT, UNSUITABLE FOR WINTER GRADING, OR SUSCEPTIBLE TO FROST ACTION POSE LIMITATIONS ON PLANNING EMBANKMENTS OF SEDIMENT BASINS, SEDIMENT TRAPS, STORM WATER RETENTION BASINS AND STORMWATER DETENTION BASINS.

   RESOLUTIONS: IMPORTING OTHER SOIL FOR EMBANKMENT OF THOSE FACILITIES, LOCATING THOSE FACILITIES ON OTHER SOILS TYPES, NOT CONSTRUCTING EMBANKMENTS DURING PERIODS PRONE TO FROST AND IMPLEMENTING COMBINATIONS OF THESE AND/OR OTHER METHODS.

STORM SEWER SYSTEMS INSPECTION AND MAINTENANCE REQUIREMENTS:

1. REMOVAL AND DISPOSAL OF TRASH AND DEBRIS: ONCE EVERY 3 MONTHS AND AFTER ALL MAJOR STORMS, TRASH AND DEBRIS SHOULD BE REMOVED FROM THE STORM SEWER SYSTEMS (i.e., STRUCTURES AND INLET GRATES) TO PREVENT THE COMPONENTS FROM BECOMING CLOGGED OR INOPERABLE DURING STORM EVENTS. DISPOSAL OF TRASH AND DEBRIS MUST COMPLY WITH ALL LOCAL, STATE, COUNTY AND FEDERAL REGULATIONS. ONLY SUITABLE DISPOSAL AND RECYCLING SITES SHOULD BE USED.
2. ICE AND SNOW REMOVALS: SNOW AND ICE ACCUMULATIONS SHOULD BE MONITORED AND REMOVED FROM INLET GRATES AND THE INLETS AND OUTLETS OF STORM SEWER SYSTEMS TO ASSURE THE CONTINUED FUNCTIONING DURING THE WINTER MONTHS.
3. DAMAGE REPAIRS: ONCE EVERY YEAR AND AFTER ALL MAJOR STORMS, ALL COMPONENTS OF THE STORM SEWER SYSTEMS (i.e., STRUCTURES, PIPES, AND INLET GRATES) SHALL BE INSPECTED FOR ANY DAMAGE AND OPERATIONAL PROBLEMS AND REPAIRS SHALL BE MADE AS NECESSARY TO RESTORE THEIR NORMAL OPERATION.

STORMWATER MANAGEMENT FACILITIES INSPECTION & MAINTENANCE REQUIREMENTS:

I. SUBSURFACE SEEPAGE BEDS / DETENTION FACILITIES
1. INFLOW STRUCTURES SEDIMENT REMOVAL: ONCE EVERY 3 MONTHS AND AFTER ALL MAJOR STORMS, INSPECT ALL SEEPAGE BEDS INFLOW STRUCTURES (WATER QUALITY STRUCTURES) FOR SEDIMENT ACCUMULATION AND REMOVE SEDIMENTS IF NECESSARY FOLLOWING THESE STEPS; REMOVE GRATE OR COVER AND SKIM OFF OILS AND FLOATABLES. USING A STADIA ROD, MEASURE DEPTH OF SEDIMENT. IF SEDIMENT IS GREATER THAN 6" DEEP, VACUUM OR MANUALLY REMOVE SEDIMENT. REPLACE GRATE OR COVER.
2. OUTFLOW / OVERFLOW STRUCTURES TRASH/DEBRIS REMOVAL: ONCE EVERY 3 MONTHS AND AFTER ALL MAJOR STORMS, INSPECT INSIDE OF ALL SEEPAGE BEDS OUTFLOW / OVERFLOW STRUCTURES AND REMOVE TRASH AND DEBRIS AS NECESSARY TO ENSURE UNCLOGGED OPERATION.
3. DAMAGE REPAIRS: ONCE EVERY YEAR AND AFTER ALL MAJOR STORMS, ALL COMPONENTS OF SEEPAGE BEDS INFLOW AND OUTFLOW / OVERFLOW STRUCTURES SHALL BE INSPECTED FOR ANY DAMAGE AND REPAIRS SHALL BE MADE AS NECESSARY TO RESTORE THEIR NORMAL OPERATION AND STRUCTURAL INTEGRITY. (NOTE: IN THIS STEP, IF REPLACEMENT OF SNOUT HOOD BECOMES NECESSARY, THEN SEEPAGE BED MANIFOLD INTERIOR SHALL BE INSPECTED USING A FLASH LIGHT FOR ANY SEDIMENT ACCUMULATION AND DAMAGE. ANY SEDIMENT REMOVAL AND/OR DAMAGE REPAIR NEEDS OBSERVED DURING THIS INSPECTION SHALL BE DISCUSSED WITH STORMTECH SYSTEMS MANUFACTURER AND ATTENDED TO AS ADVISED.)

II. WATER QUALITY STRUCTURES
1. SEDIMENT REMOVAL: ONCE EVERY 3 MONTHS AND AFTER ALL MAJOR STORMS, INSPECT ALL WATER QUALITY STRUCTURES FOR SEDIMENT ACCUMULATION AND REMOVE SEDIMENTS IF NECESSARY FOLLOWING THE STEPS GIVEN BELOW:
a) REMOVE GRATE OR COVER.
b) SKIM OFF OILS AND FLOATABLES.
c) USING A STADIA ROD, MEASURE DEPTH OF SEDIMENT.
d) IF SEDIMENT IS GREATER THAN 6" DEEP, VACUUM OR MANUALLY REMOVE SEDIMENT.
e) REPLACE GRATE OR COVER.

III. ROOF DRAIN COLLECTION SYSTEMS
ANNUALLY AND AFTER 100-YEAR STORM EVENTS, THE FOLLOWING INSPECTION AND MAINTENANCE SHALL BE PERFORMED:
INSPECT GUTTERS, DOWNSPOUTS, ROOF DOWNSPOUT FILTERS, AND ANY VISIBLE COMPONENTS OF ROOF DRAIN COLLECTION SYSTEM FOR DAMAGE. CLEAN ROOF DOWNSPOUT FILTER AND ANY DEBRIS FROM GUTTER PROTECTION GUARD. CLEAN ANY ROOF DRAIN CLOGS THAT MAY OCCASIONALLY OCCUR.

IV. NATIVE SPECIES USE: LANDSCAPING DESIGN HAS INCLUDED NATIVE SPECIES TO THE MAXIMUM EXTENT POSSIBLE TO LOWER USE OF FERTILIZERS TO REDUCE NITROGEN LOAD IN RUNOFF. ACCORDINGLY, MAINTENANCE OF ALL LANDSCAPING AND VEGETATION SHALL BE DONE USING NATIVE SPECIES TO MAXIMUM EXTENT POSSIBLE.

EROSION AND SEDIMENT CONTROL DEVICES CONSTRUCTION NARRATIVES

1. THE FOLLOWING INSTRUCTIONS ARE PROVIDED FOR THE CONTRACTOR'S USE IN CONSTRUCTION OF THE PROJECT. THE CONTRACTOR IS RESPONSIBLE FOR UNDERTAKING ALL CONSTRUCTION ACTIVITIES IN ACCORDANCE WITH CURRENT PADEP REGULATIONS.

STANDARD SILT FENCE (18")

1. THE CONTRACTOR SHALL INSTALL THE SILT FENCE IN AREAS SHOWN ON THE PLAN. A TRENCH FOR THE REQUIRED ANCHORING OF THE SILT FENCE SHALL BE EXCAVATED WITH A MINIMUM OF SITE DISTURBANCE. THE SUPPORT STAKES SHALL BE INSTALLED TO A MINIMUM DEPTH OF TWELVE INCHES (12") AND SPACED A MAXIMUM OF EIGHT FEET (8') ON CENTER. THE FILTER FABRIC MUST BE ADEQUATELY ANCHORED INTO THE UPSLOPE SIDE OF THE SUPPORT STAKES AND THE TOE OF THE FILTER FABRIC MUST BE KEYED INTO THE SLOPE AS SHOWN ON THE DETAIL. ALL SILT FENCE MUST BE INSTALLED PARALLEL TO EXISTING CONTOURS AND WITH SUFFICIENT TENSION TO RESIST DROOPING OF THE FABRIC. THE ENDS OF THE SILT FENCE MUST BE EXTENDED UPSLOPE A MINIMUM OF EIGHT FEET (8') AT AN ANGLE OF 45 DEGREES TO THE MAIN FENCE ALIGNMENT.

SILT FENCE (30")

1. THIRTY-INCH HIGH SILT FENCE: THE CONTRACTOR SHALL INSTALL THE SILT FENCE IN AREAS SHOWN ON THE PLAN. A TRENCH FOR THE REQUIRED ANCHORING OF THE SILT FENCE SHALL BE EXCAVATED WITH A MINIMUM OF SITE DISTURBANCE. THE SUPPORT STAKES SHALL BE INSTALLED TO A MINIMUM DEPTH OF EIGHTEEN INCHES (30") AND SPACED A MAXIMUM OF EIGHT FEET (8') ON CENTER. THE FILTER FABRIC MUST BE ADEQUATELY ANCHORED ONTO THE UPSLOPE SIDE OF THE SUPPORT STAKES AND THE TOE OF THE FILTER FABRIC MUST BE KEYED INTO THE SLOPE AS SHOWN ON THE DETAIL. ALL SILT FENCE MUST BE INSTALLED PARALLEL TO EXISTING CONTOURS AND WITH SUFFICIENT TENSION TO RESIST DROOPING OF THE FABRIC. THE ENDS OF THE SILT FENCE MUST BE EXTENDED UPSLOPE A MINIMUM OF EIGHT FEET (8') AT AN ANGLE OF 45 DEGREES TO THE MAIN FENCE ALIGNMENT. FENCE FABRIC SHALL BE AMOCO TYPE 1380, 2125 OR APPROVED EQUAL.
2. THE CONTRACTOR SHALL INSPECT THE SILT FENCE AFTER EVERY STORM EVENT. ALL ACCUMULATED SEDIMENTS MUST BE REMOVED AS REQUIRED TO KEEP THE SILT FENCE FUNCTIONING. THE CONTRACTOR SHALL ENSURE THAT, IN NO CASE, DOES THE SEDIMENT ACCUMULATION EXCEED ONE HALF OF THE HEIGHT OF THE SILT FENCE. ALL UNDERCUTTING OR EROSION OF THE TOE ANCHOR WILL BE REPAIRED IMMEDIATELY WITH COMPACTED BACKFILL MATERIALS. ANY DAMAGED OR OVERTOPPED SILT FENCE SHALL BE IMMEDIATELY REPLACED WITH A ROCK FILTER.
3. SILT FENCE SHALL BE INSTALLED DOWNSLOPE OF ALL AREAS TO BE DISTURBED BEFORE ANY WORK BEGINS. SILT FENCE SHALL BE INSTALLED AS NEAR AS POSSIBLE TO THE LOCATION SHOWN ON THE PLANS.
4. CONSTRUCT SILT FENCE ALONG THE DOWNSTREAM SIDE OF ALL PROPOSED CUT AND FILL CONSTRUCTION.
5. SEDIMENT SHALL BE REMOVED WHEN SILT ACCUMULATIONS REACH 1/2 THE ABOVE GROUND HEIGHT OF THE FENCE.

COMPOST FILTER SOCK

1. THE CONTRACTOR SHALL INSTALL THE COMPOST FILTER SOCK AT THE LOCATION AND ORIENTATION SHOWN ON THE PLAN. AS NEEDED, HEAVY VEGETATION SHALL BE REMOVED WITH MINIMAL DISTURBANCE FROM THE SOCK LOCATION PRIOR TO INSTALLATION. THE SOCK MUST BE INSTALLED PARALLEL TO EXISTING CONTOURS AND THE ENDS OF THE SOCK MUST BE EXTENDED UPSLOPE A MINIMUM OF EIGHT FEET (8') AT AN ANGLE OF FORTY-FIVE DEGREES (45°) TO THE MAIN FENCE ALIGNMENT. SUPPORT STAKES SHALL BE INSTALLED THROUGH THE CENTER OF THE SOCK TO A MINIMUM DEPTH OF TWELVE INCHES (12") AND SPACED A MAXIMUM OF TEN FEET (10') ON CENTERS. THE FLAT DIMENSION OF THE INSTALLED SOCK SHOULD BE 1.5 TIMES THE NOMINAL DIAMETER. FILTER MEDIA SHALL BE INSTALLED ALONG THE UPSLOPE SIDE OF THE CONTROL, FILLING THE SEAM BETWEEN THE SURFACE AND THE SOCK. FOR INSTALLATION ON PAVED SURFACES, CONCRETE BLOCKS SHALL BE PLACED ON THE DOWNSLOPE SIDE OF THE SOCKS IN LIEU OF STAKING. CONCRETE BLOCK PLACEMENT SHALL FOLLOW THE SAME INTERVALS RECOMMENDED FOR STAKING.

ROCK CONSTRUCTION ENTRANCE

1. THE ROCK CONSTRUCTION ENTRANCE SHALL BE INSTALLED WITH MINIMUM WIDTH OF TWENTY FEET (20'), MINIMUM LENGTH OF FIFTY FEET (50'), AND MINIMUM THICKNESS OF EIGHT INCHES (8") USING AASHTO #1 STONES. A LAYER OF GEOTEXTILE FABRIC SHALL BE PLACED UNDERNEATH THE STONE.

TEMPORARY STOCKPILE

1. TEMPORARY STOCKPILE LOCATIONS SHALL BE USED TO STORE STRIPPED TOPSOIL AND EXCESS MATERIAL DURING CONSTRUCTION ACTIVITIES. STOCKPILE SIDE SLOPES SHALL NOT EXCEED 2:1 (H:V) AND SHALL NOT EXCEED A HEIGHT OF 35 FEET. STOCKPILE SHALL BE SURROUNDED BY SILT FENCE OR 8" COMPOST FILTER SOCK AT ALL TIMES. INACTIVE STOCKPILES SHALL BE SEEDED AND MULCHED ACCORDING TO THE SURFACE STABILIZATION CRITERIA FOR TEMPORARY COVER.

COLLECTOR CHANNELS

1. THE CONTRACTOR SHALL CONSTRUCT THE CHANNELS IN THE LOCATIONS SHOWN ON THE PLAN. CHANNELS SHALL BE IMMEDIATELY STABILIZED WITH EROSION CONTROL MATTING WHICH WILL PREVENT EROSION OF THE CHANNEL BOTTOM AND SLOPES.

INLET PROTECTION

1. INLET PROTECTION SHALL BE APPLIED, AS DETAILED ON THE PLAN, TO EVERY INLET.

EROSION CONTROL MATTING

1. THE CONTRACTOR SHALL INSTALL THE EROSION CONTROL MATTING WHERE INDICATED ON THE PLANS. REFER TO MATTING SPECIFICATIONS AND DETAILS FOR MATTING TYPE AND INSTALLATION PROCEDURES.

EROSION AND SEDIMENT CONTROL DEVICES MAINTENANCE NARRATIVES

STANDARD SILT FENCE (18") AND SILT FENCE (30")

1. THE CONTRACTOR SHALL INSPECT THE SILT FENCE AFTER EVERY STORM EVENT. ALL ACCUMULATED SEDIMENTS MUST BE REMOVED AS REQUIRED TO KEEP THE SILT FENCE FUNCTIONING. THE CONTRACTOR SHALL ENSURE THAT IN NO CASE DOES THE SEDIMENT ACCUMULATION EXCEED ONE HALF OF THE HEIGHT OF THE SILT FENCE. ALL UNDERCUTTING OR EROSION OF THE TOE ANCHOR WILL BE REPAIRED IMMEDIATELY WITH COMPACTED BACKFILL MATERIALS. ANY DAMAGED OR OVERTOPPED SILT FENCE SHALL BE IMMEDIATELY REPLACED WITH A ROCK FILTER.

COMPOST FILTER SOCK

1. THE CONTRACTOR SHALL INSPECT THE COMPOST FILTER SOCK WEEKLY AND AFTER EVERY RUNOFF EVENT. ACCUMULATED SEDIMENT SHALL BE REMOVED WHEN IT HAS REACHED HALF THE INSTALLED HEIGHT OF THE SOCK. IF SOCK IS DAMAGED, IT SHALL BE REPAIRED OR REPLACED IF NECESSARY. MAINTENANCE SHALL CONTINUE UNTIL THE DISTURBED AREA ABOVE THE DEVICE HAS BEEN PERMANENTLY STABILIZED AND CONSTRUCTION ACTIVITY HAS CEASED.

ROCK CONSTRUCTION ENTRANCE

1. THE CONTRACTOR SHALL CONSTANTLY MAINTAIN THE ROCK CONSTRUCTION ENTRANCE SPECIFIED DIMENSIONS BY ADDING ROCK. A STOCKPILE SHALL BE MAINTAINED ON THE SITE AS NEEDED FOR THIS PURPOSE. SEDIMENT DEPOSITED ON PAVED ROADWAYS SHALL BE REMOVED AND RETURNED TO THE CONSTRUCTION SITE IMMEDIATELY. IF EXCESSIVE AMOUNTS OF SEDIMENT ARE BEING DEPOSITED ON ROADWAY, EXTEND LENGTH OF ROCK CONSTRUCTION ENTRANCE BY FIFTY FOOT (50') INCREMENTS UNTIL CONDITION IS ALLEVIATED OR INSTALL WASH RACK. WASHING THE ROADWAY OR SWEEPING THE DEPOSITS INTO ROADWAY DITCHES, SEWERS, CULVERTS, OR OTHER DRAINAGE COURSES IS NOT ACCEPTABLE.
2. ROCK CONSTRUCTION ENTRANCE THICKNESS SHALL BE CONSTANTLY MAINTAINED TO THE SPECIFIED DIMENSIONS BY ADDING ROCK.
3. CONTRACTOR SHALL INSPECT THE ROCK CONSTRUCTION ENTRANCE AFTER EACH RAIN EVENT AND ON A WEEKLY BASIS. NEEDED REPAIRS SHOULD BE INITIATED IMMEDIATELY AFTER THE INSPECTION.
4. ALL STABILIZED CONSTRUCTION ENTRANCE SHALL BE INSTALLED AS NEAR AS POSSIBLE TO THE LOCATION SHOWN ON THE PLAN. PRIOR TO FINAL ROADWAY CONSTRUCTION, THE AGGREGATE SHALL BE REMOVED AND THE ROADWAY SHALL BE PREPARED AND INSTALLED ACCORDING TO SPECIFICATIONS.

TEMPORARY STOCKPILE

1. THE CONTRACTOR SHALL INSPECT THE TEMPORARY STOCKPILE AFTER EVERY STORM EVENT. IF STOCKPILES ARE LEFT IN PLACE FOR EXTENDED PERIODS, RE-APPLY TEMPORARY SEED AND MULCH AS NEEDED TO PREVENT EROSION.

COLLECTOR CHANNELS

1. CHANNELS SHALE BE INSPECTED WEEKLY AND AFTER EACH STORM EVENT. ERODED AREAS SHALL BE IMMEDIATELY RE-STABILIZED TO PREVENT TRANSPORT OF SEDIMENT WITHIN THE CHANNELS. ANY AREA OF THE CHANNEL SUFFERING FROM REPEATED EROSION SHALL BE LINED WITH STONE.

EROSION CONTROL MATTING

1. THE CONTRACTOR SHALL INSPECT THE EROSION CONTROL MATTING WEEKLY AND AFTER EVERY STORM EVENT. IF THE MATTING BECOMES DAMAGED OR SLIDES, MAKE REPAIRS IN ACCORDANCE WITH THE MANUFACTURER'S RECOMMENDATIONS.

INLET PROTECTION DEVICES

1. THE CONTRACTOR SHALL INSPECT THE INLET PROTECTION DEVICES WEEKLY AND AFTER EACH STORM EVENT. INLET FILTER BAGS SHALL BE EMPTIED AND RINSED OR REPLACED WHEN HALF FULL OR WHEN FLOW CAPACITY HAS BEEN REDUCED SO AS TO CAUSE FLOODING OR BYPASSING OF THE INLET. DAMAGED OR CLOGGED BAGS SHALL BE REPLACED. A SUPPLY SHALL BE MAINTAINED ON SITE FOR REPLACEMENT OF BAGS. ALL NEEDED REPAIRS SHALL BE INITIATED IMMEDIATELY AFTER THE INSPECTION. ACCUMULATED SEDIMENT SHALL BE DISPOSED OF, AS WELL AS ALL RETIRED BAGS, ACCORDING TO THE PLAN NOTES. FOR STONE AND BLOCK INLET PROTECTION, SEDIMENT SHALL BE REMOVED WHEN IT REACHES HALF THE HEIGHT OF THE STONE. DAMAGED OR CLOGGED INSTALLATIONS SHALL BE REPAIRED OR REPLACED IMMEDIATELY.

CONSTRUCTION ACCESS

1. THE CONTRACTOR SHALL INSPECT WEEKLY AND AFTER MAJOR STORM EVENTS TO ENSURE THAT THE ACCESS SHOWN ON THE PLAN FOR CONSTRUCTION OF EROSION AND SEDIMENT CONTROLS IS NOT BEING SEVERELY ERODED OR SUFFERING FROM EXTREME RUTTING. IF FOUND TO BE SEVERELY ERODED OR EXTREMELY RUTTED, A TOP DRESSING OF HARD, DURABLE STONE SHALL BE INSTALLED OVER THE SURFACE.

OWNERSHIP AND OPERATION/INSPECTION/MAINTENANCE RESPONSIBILITY NOTES

1. THE STORM SEWER SYSTEMS, BMP'S (INFILTRATION FACILITIES AND VEGETATIVE SWALES), ETC. LOCATED IN OPEN SPACE/EASEMENT AREAS ARE THE RESPONSIBILITY (i.e., OPERATION / INSPECTION / MAINTENANCE) OF THE HOME OWNERS ASSOCIATION OR SUBSEQUENT SITE OWNERS.
2. INDIVIDUAL ON LOT STORM SEWER SYSTEMS AND INLETS, BMP'S (INFILTRATION FACILITIES AND VEGETATIVE SWALES), ETC. LOCATED ON EACH INDIVIDUAL LOT, SHALL BE THE RESPONSIBILITY (i.e., OPERATION / INSPECTION / MAINTENANCE) OF EACH INDIVIDUAL LOT PROPERTY OWNER.

GENERAL INSPECTION AND MAINTENANCE NOTES

1. STORMWATER BMPs SHALL BE INSPECTED TO ENSURE THAT THEY CONTINUE TO REFLECT THE DESIGN / SPECIFICATIONS SHOWN IN THE APPROVED CONSTRUCTION PLANS.
2. INSPECTIONS SHALL BE PERFORMED BY INDIVIDUALS QUALIFIED TO INSPECT THE APPLICABLE TYPE OF FACILITIES AND FAMILIAR WITH THEIR DESIGN AND PERFORMANCE REQUIREMENTS SO THAT MAINTENANCE AND/OR REPAIRS CAN BE PROPERLY IDENTIFIED. MAINTENANCE AND/OR REPAIR WORK SHALL ALSO BE INSPECTED BY SUCH INDIVIDUALS TO ENSURE ITS SATISFACTORY COMPLETION.
3. MAINTENANCE AND/OR REPAIR WORK SHALL BE COMPLETED TO RESTORE THE FACILITIES TO THEIR ORIGINAL DESIGN IN ACCORDANCE WITH CONSTRUCTION DETAILS AND SPECIFICATIONS INCLUDED IN THE ORIGINAL CONSTRUCTION PLANS.
4. SEDIMENT, TRASH, DEBRIS AND/OR DAMAGED MATERIALS COLLECTED DURING MAINTENANCE SHALL BE DISPOSED OF IN AN ACCEPTABLE MANNER IN ACCORDANCE WITH APPLICABLE LAW(S) AND REGULATION(S).
5. VEHICLES SHOULD NOT BE PARKED OR DRIVEN OVER INFILTRATION BMP'S.
6. PER THE BMP MANUAL, PROTOCOL 2 "FAILURE" FOR INFILTRATION SYSTEMS WITH VEGETATIVE SURFACES, SUCH AS RAIN GARDENS MAY INCLUDE THE INABILITY TO SUPPORT SURFACE VEGETATION CAUSED BY TOO MUCH OR TOO LITTLE WATER. FAILURE CAN ALSO OCCUR WHEN INFILTRATION FACILITIES DO NOT DEWATER PER THE DESIGNED/APPROVED RATE OR EXCEED THE MAXIMUM DEWATERING TIME OF 72 HOURS. THE FOLLOWING STEPS WILL REDUCE THE CHANCE OF FAILURE:
    - THE CONTRACTOR SHALL USE PROPER CONSTRUCTION TECHNIQUES TO AVOID SOIL COMPACTING/SMEARING WHICH RESULT IN SIGNIFICANTLY REDUCED INFILTRATION RATES
    - THE CONTRACTOR SHALL STABILIZE THE SITE AND SOIL CONDITIONS PRIOR TO BMP'S RECEIVING RUNOFF, WHICH GREATLY INCREASES THE POTENTIAL FOR SEDIMENT CLOGGING FROM CONTIGUOUS LAND SURFACES.
    - THE CONTRACTOR SHALL PROVIDE ADEQUATE PRETREATMENT, ESPECIALLY OF SEDIMENT LADEN RUNOFF, WHICH CAN CAUSE A GRADUAL REDUCTION OF INFILTRATION RATES.
    - THE CONTRACTOR AND FUTURE HOME OWNER SHALL PROVIDE PROPER MAINTENANCE (EROSION REPAIR, RE-VEGETATION, ETC) WHICH CAN REDUCE THE LONGEVITY OF INFILTRATION BMP'S
    - THE ENGINEERS SHALL DESIGN ADEQUATE BMP TO ADDRESS SITE RUNOFF REQUIREMENTS.
7. A BLANKET ACCESS EASEMENT IS GRANTED TO EAST WHITELAND TOWNSHIP AND THE CHESTER COUNTY CONSERVATION DISTRICT FOR THE INSPECTION AND POSSIBLE EMERGENCY MAINTENANCE OF STORMWATER MANAGEMENT FACILITIES PER THE PA BMP MANUAL AND THE POST CONSTRUCTION STORMWATER MANAGEMENT PLAN.

GRASS SWALES

GENERAL MAINTENANCE NOTES

1. MAINTENANCE ACTIVITIES TO BE DONE ANNUALLY AND WITHIN 48 HOURS AFTER A MAJOR STORM EVENT (GREATER THAN 1" RAINFALL DEPTH).
2. INSPECT AND CORRECT EROSION PROBLEMS, DAMAGE TO VEGETATION AND SEDIMENT OR DEBRIS ACCUMULATION. RE-ESTABLISH GROUND COVER (SEED OR PLUGS) WITH EROSION CONTROL BLANKET AS A TEMPORARY COVER. PLANT ALTERNATIVE GROUND COVER SPECIES IF THE CAUSE IS UNSUCCESSFUL GROUND COVER ESTABLISHMENT.
3. CHECK FOR POOLS OR STANDING WATER. DEWATER AND TAKE CORRECTIVE ACTION (INCLUDING BUT NOT LIMITED TO REGRADING TO RESTORE ORIGINAL GRADES OR REPLACEMENT OF TOPSOIL).
4. MOW AND TRIM VEGETATION TO ENSURE SAFETY, FUNCTION AND AESTHETICS. CLEAR ANY ACCUMULATED LITTER PRIOR TO MOWING. MOW ONLY WHEN SWALE IS DRY AND WILL NOT RUT.
5. REGULAR MOWING SHOULD BE APPROPRIATE TO GROUND COVER REQUIREMENTS (GRASSES SHOULD BE MOWED TO A DEPTH OF 3"-5", PERENNIALS SHOULD NOT BE MOWED). DURING THE WINTER MONTHS, MOW GROUND COVER (REGARDLESS OF SPECIES) TO A HEIGHT OF 2" TO ENCOURAGE RE-ESTABLISHMENT OF PERENNIALS AND GRASSES.

NOTE: REFER TO PCSM PLAN AND PCSM DETAILS FOR SEEDING SPECIFICATION FOR "MEADOW" AREAS (ERNMX-180).

EROSION CONTROL MATTING INSTALLATION GUIDES

CHANNEL INSTALLATION GUIDE

1. PREPARE SOIL BEFORE INSTALLING BLANKETS, INCLUDING APPLICATION OF LIME, FERTILIZER, AND SEED.
2. BEGIN AT THE TOP OF THE CHANNEL BY ANCHORING THE BLANKET IN A 6" (15 CM) DEEP X 6" (15 CM) WIDE TRENCH. BACKFILL AND COMPACT THE TRENCH AFTER STAPLING.
3. ROLL CENTER BLANKET IN DIRECTION OF WATER FLOW ON BOTTOM OF CHANNEL.
4. PLACE BLANKETS END OVER END (SHINGLE STYLE) WITH A 6" (15 CM) OVERLAP. USE A DOUBLE ROW OF STAGGERED STAPLES 4" (10 CM) APART TO SECURE BLANKETS.
5. FULL LENGTH EDGE OF BLANKETS AT TOP OF SIDE SLOPES MUST BE ANCHORED IN 6" (15 CM) DEEP X 6" (15 CM) WIDE TRENCH. BACKFILL AND COMPACT THE TRENCH AFTER STAPLING.
6. BLANKETS ON SIDE SLOPES MUST BE OVERLAPPED 4" (10 CM) OVER THE CENTER BLANKET AND STAPLED [2" (5 CM) FOR C350 MATTING].
7. IN HIGH FLOW CHANNEL APPLICATIONS, A STAPLE CHECK SLOT IS RECOMMENDED AT 30 TO 40 FOOT (9 M TO 12 M) INTERVALS. USE A ROW OF STAPLES 4" (10 CM) APART OVER ENTIRE WIDTH OF THE CHANNEL. PLACE A SECOND ROW 4" (10 CM) BELOW THE FIRST ROW IN A STAGGERED PATTERN.
8. THE TERMINAL END OF THE BLANKETS MUST BE ANCHORED IN A 6" (15 CM) DEEP X 6" (15 CM) WIDE TRENCH. BACKFILL AND COMPACT THE TRENCH AFTER STAPLING.

SLOPE INSTALLATION GUIDE

1. PREPARE SOIL BEFORE INSTALLING BLANKETS, INCLUDING APPLICATION OF LIME, FERTILIZER, AND SEED. NOTE: WHEN USING CELL-O-SEED DO NOT SEED PREPARED AREA. CELL-O-SEED MUST BE INSTALLED WITH PAPER SIDE DOWN.
2. BEGIN AT THE TOP OF THE SLOPE BY ANCHORING THE BLANKET IN 6" (15 CM) DEEP X 6" (15 CM) WIDE TRENCH. BACKFILL AND COMPACT THE TRENCH AFTER STAPLING.
3. ROLL THE BLANKETS DOWN OR HORIZONTALLY ACROSS THE SLOPE.
4. THE EDGES OF PARALLEL BLANKETS MUST BE STAPLED WITH APPROXIMATELY 2" (5 CM) OVERLAP.
5. WHEN BLANKETS MUST BE SPLICED DOWN THE SLOPE, PLACE BLANKETS END OVER END (SHINGLE STYLE) WITH APPROXIMATELY 4" (10 CM) OVERLAP. STAPLE THROUGH OVERLAPPED AREA, APPROXIMATELY 12" (30 CM) APART.

SHORE INSTALLATION GUIDE

1. FOR EASIER INSTALLATION, LOWER SHORE WATER LEVEL BEFORE INSTALLATION.
2. PREPARE SOIL BEFORE INSTALLING BLANKETS, INCLUDING APPLICATION OF LIME, FERTILIZER, AND SEED.
3. THE TOP EDGE OF THE BLANKET MUST BE ANCHORED IN A 6" (15 CM) DEEP X 6" (15 CM) WIDE TRENCH. BACKFILL AND COMPACT THE TRENCH AFTER STAPLING.
4. PLACE BLANKETS END OVER END WITH A 3" (7.5 CM) TO 4" (10 CM) OVERLAP. STAPLE THROUGH BOTH BLANKETS OF THE OVERLAPPED AREA, APPROXIMATELY 6" (15 CM) APART. ADJACENT SEAMS WHERE TWO BLANKETS SIDE BY SIDE ARE JOINED MUST CONSIST OF A 4" (10 CM) TO 6" (15 CM) OVERLAP.
5. THE EDGE OF THE BLANKET THAT FALLS BELOW NORMAL WATER LEVEL MUST BE ANCHORED IN A 12" (30 CM) DEEP X 6" (15 CM) WIDE TRENCH. BACKFILL AND COMPACT THE TRENCH AFTER STAPLING. (STONE MAY BE SUBSTITUTED FOR SOIL BACKFILL.)
6. FOR LONG BANKS, (TOP TO BOTTOM) USE VERTICAL INSTALLATION.

RESOLUTIONS FOR SOIL RISKS / LIMITATIONS

FROST ACTION
REASON(S) FOR RISK: SOIL CHARACTERISTICS
RESOLUTION: BOTTOM OF FOUNDATIONS / FOOTINGS SHOULD BE INSTALLED BELOW 36". PAVING SECTIONS SHOULD BE INSTALLED ACCORDING TO THE DETAIL PROVIDED ON THIS PLAN TO ENSURE ADEQUATE BUFFERING FROM ON-SITE SOILS.

EROSION BY WATER
REASONS FOR RISK: SOIL CHARACTERISTICS
RESOLUTION: IMPLEMENT THE EROSION AND SEDIMENT CONTROL PLAN INCLUDED IN THESE PLANS.

CORROSION OF UNCOATED STEEL
REASONS FOR RISK: SOIL CHARACTERISTICS
RESOLUTION: UNCOATED STEEL SHOULD NOT BE PLACED IN PERMANENT CONTACT WITH ON-SITE SOILS. PROPER COATING OF THE STEEL OR BUFFERING FROM ON-SITE SOILS SHOULD BE PROVIDED.

CORROSION OF CONCRETE
REASONS FOR RISK: SOIL CHARACTERISTICS
RESOLUTION: CONCRETE THAT IS PROPOSED TO BE PLACED IN PERMANENT CONTACT WITH ON-SITE SOILS SHOULD INCLUDE CORROSION-RESISTANT AD-MIXTURES, OR BUFFERING FROM ON-SITE SOILS SHOULD BE PROVIDED.

DWELLINGS WITHOUT BASEMENTS
REASONS FOR LIMITATIONS: SHRINK-SWELL
RESOLUTION: ON-SITE SOILS USED FOR FOUNDATION GRADING SHALL BE EVALUATED FOR SUITABILITY BY APPROPRIATE PERSONNEL. THE CONTRACTOR SHALL BE PREPARED TO IMPORT SOIL IF ON-SITE SOIL IS NOT FOUND SUITABLE.
REASONS FOR LIMITATIONS: SLOPE
RESOLUTION: A GRADING PLAN IS INCLUDED THAT SHOWS PROPOSED GRADING ADJACENT TO AND WITHIN THE VICINITY OF THE DWELLINGS.

LOCAL ROADS AND STREETS
REASONS FOR LIMITATIONS: SHRINK-SWELL, LOW STRENGTH, FROST ACTION
RESOLUTION: SOILS USED FOR ROADS AND STREETS GRADING SHALL BE EVALUATED FOR SUITABILITY BY APPROPRIATE PERSONNEL. THE CONTRACTOR SHALL BE PREPARED TO IMPORT SOIL IF ON-SITE SOIL IS NOT FOUND SUITABLE.
REASONS FOR LIMITATIONS: SLOPE
RESOLUTION: A GRADING PLAN IS INCLUDED THAT SHOWS PROPOSED GRADING FOR THE ROADS AND STREETS.

SHALLOW EXCAVATIONS
REASONS FOR LIMITATIONS: SLOPE
RESOLUTION: THE CONTRACTOR SHALL MAKE THE PROPER ACCOMMODATIONS TO PREPARE SLOPED AREAS FOR SHALLOW EXCAVATIONS.
REASONS FOR LIMITATIONS: CUTBANKS CAVE
RESOLUTION: THE CONTRACTOR SHALL FOLLOW O.S.H.A. STANDARDS FOR SHALLOW EXCAVATIONS.
REASONS FOR LIMITATIONS: DEPTH TO SATURATED ZONE
RESOLUTION: THE CONTRACTOR SHALL BE PREPARED TO PUMP OUT GROUNDWATER FROM SHALLOW EXCAVATIONS.

EMBANKMENTS
REASONS FOR LIMITATIONS: PIPING
RESOLUTIONS: STORMWATER MANAGEMENT FACILITY EMBANKMENTS ARE DESIGNED WITH CLAY CORES AND ANTI-SEEP COLLARS.

LAWNS AND LANDSCAPING
REASONS FOR LIMITATIONS: SLOPE
RESOLUTION: THE CONTRACTOR SHALL PROVIDE LANDSCAPING SUITABLE TO THE SLOPE IN THE INTENDED AREA.
REASONS FOR LIMITATIONS: GRAVEL CONTENT, LARGE STONES CONTENT
RESOLUTION: SOILS USED FOR LAWNS AND LANDSCAPING SHALL BE EVALUATED BY APPROPRIATE PERSONNEL. THE CONTRACTOR SHALL BE PREPARED TO IMPORT SOIL IF ON-SITE SOIL IS NOT FOUND SUITABLE FOR VEGETATIVE ESTABLISHMENT.

ROADFILL SOURCE
REASONS FOR LIMITATIONS: SHRINK-SWELL
RESOLUTION: ON-SITE SOILS USED AS A SOURCE OF ROADFILL SHALL BE EVALUATED FOR SUITABILITY BY APPROPRIATE PERSONNEL. THE CONTRACTOR SHALL BE PREPARED TO IMPORT SOIL IF ON-SITE SOIL IS NOT FOUND SUITABLE.

TOPSOIL SOURCE
REASONS FOR LIMITATIONS: SLOPE, ROCK FRAGMENTS, HARD TO RECLAIM (ROCK FRAGMENTS)
RESOLUTION: TOPSOIL RETAINED FROM THE SITE SHALL BE EVALUATED BY APPROPRIATE PERSONNEL. THE CONTRACTOR SHALL BE PREPARED TO IMPORT TOPSOIL IF ON-SITE TOPSOIL IS NOT FOUND SUITABLE FOR VEGETATIVE ESTABLISHMENT.

GENERAL WATERSHED NOTES:

1. THIS PROJECT IS WITHIN A SPECIALLY PROTECTED HIGH QUALITY WATERSHED, EXTREME CARE SHOULD BE EXERCISED IN ALL DISTURBANCE ACTIVITIES TO PREVENT DEGRADATION TO THE WATER OF THE COMMONWEALTH.
2. RUNOFF FROM THIS SITE WILL ENTER THE RIDLEY CREEK AND VALLEY CREEK WHICH ARE IDENTIFIED BY PA CODE TITLE 25 CHAPTER 93 AS EV, MF (VALLEY CREEK) AND HQ, TSF (RIDLEY CREEK) STREAMS.

EV EXCEPTIONAL VALUE WATERS: – A SURFACE WATER THAT MEETS ONE OR MORE OF THE FOLLOWING CONDITIONS IS AN EXCEPTIONAL VALUE WATER:

(1) THE WATER MEETS THE REQUIREMENTS OF SUBSECTION (A) AND ONE OR MORE OF THE FOLLOWING:

(i) THE WATER IS LOCATED IN A NATIONAL WILDLIFE REFUGE OR A STATE GAME PROPAGATION AND PROTECTION AREA.

(ii) THE WATER IS LOCATED IN A DESIGNATED STATE PARK NATURAL AREA OR STATE FOREST NATURAL AREA, NATIONAL NATURAL LANDMARK, FEDERAL OR STATE WILD RIVER, FEDERAL WILDERNESS AREA OR NATIONAL RECREATIONAL AREA.

(iii) THE WATER IS AN OUTSTANDING NATIONAL, STATE, REGIONAL OR LOCAL RESOURCE WATER.

(iv) THE WATER IS SURFACE WATER OF EXCEPTIONAL RECREATIONAL SIGNIFICANCE.

(v) THE WATER ACHIEVES A SCORE OF AT LEAST 92% (OR ITS EQUIVALENT) USING THE METHODS AND PROCEDURES DESCRIBED IN SUBSECTION (a)(2)(i)(A) OR (B).

(vi) THE WATER IS DESIGNATED AS A "WILDERNESS TROUT STREAM" BY THE FISH AND BOAT COMMISSION FOLLOWING PUBLIC NOTICE AND COMMENT.

(2) THE WATER IS A SURFACE WATER OF EXCEPTIONAL ECOLOGICAL SIGNIFICANCE.

HQ HIGH QUALITY WATERS – A STREAM OR WATERSHED WHICH HAS EXCELLENT QUALITY WATERS AND ENVIRONMENTAL OR OTHER FEATURES REQUIRE SPECIAL WATER QUALITY PROTECTION.

TSF TROUT STOCKING – MAINTENANCE OF STOCK TROUT FROM FEBRUARY 15 TO JULY 31 AND MAINTENANCE AND PROPAGATION OF FISH SPECIES AND ADDITIONAL FLORA AND FAUNA WHICH ARE INDIGENOUS TO A WARM WATER HABITAT.

MF MIGRATORY FISHES – PASSAGE MAINTENANCE AND PROPAGATION OF ANADROMOUS AND CATADROMOUS FISHES AND OTHER FISHES WHICH ASCEND TO FLOWING WATERS TO COMPLETE THEIR LIFE CYCLE.

3. BECAUSE THIS PROJECT IS WITHIN SPECIALLY PROTECTED HIGH QUALITY WATERSHEDS, ALL AREAS REQUIRING INTERIM OR FINAL STABILIZATION MUST BE ADDRESSED WITHIN 72 HOURS OF COMPLETION OF DISTURBANCE.
4. TEMPORARY AND PERMANENT CHANNELS WITH DESIGN STORM VELOCITIES GREATER THAN 3.0 FPS UTILIZE GEOTEXTILE LININGS.

WATERSHED NOTE:

THIS PROJECT IS LOCATED IN THE RIDLEY AND VALLEY CREEK WATERSHEDS, WHICH ARE CLASSIFIED AS HQ AND EV STREAMS BY PA CHAPTER 93. THE EXISTING USE IS CLASSIFIED AS HQ AND EV. EXTREME CARE SHOULD BE EXERCISED IN ALL DISTURBANCE ACTIVITIES TO PREVENT DEGRADATION TO THESE CREEKS. ALL DISTURBED AREA ON WHICH WORK HAS BEEN OR WILL BE STOPPED MUST BE PROMPTLY STABILIZED WITH APPROPRIATE TEMPORARY OR PERMANENT STABILIZATION MEASURES.

THE GOAL OF THE PCSM PLAN IS TO PRESERVE THE INTEGRITY OF STREAM CHANNELS AND MAINTAIN AND PROTECT THE PHYSICAL, BIOLOGICAL AND CHEMICAL QUALITIES OF THE RECEIVING STREAMS. THE FOLLOWING IS SOURCE AND CAUSE OF IMPAIRMENT ACCORDING TO CATEGORIES 4 AND 5 PA INTEGRATED WATER QUALITY MONITORING AND ASSESSMENT REPORT:
RIDLEY CREEK [APP. E, SILTATION (5), CAUSE UNKNOWN (5), WATER VARIABILITY (4C)]
VALLEY CREEK [APP.C, PCB (4A), APP. B, PATHOGENS, APP. E, SILTATION (5), CAUSE UNKNOWN (5), OTHER HABITAT ALTERATIONS, WATER/FLOW VARIABILITY (4C)].

INSPECTION REQUIREMENTS:

INSPECTIONS: A QUALIFIED INSPECTOR SHOULD PERFORM INSPECTIONS OF THE FACILITIES ON A REGULARLY SCHEDULED BASIS. THE INSPECTIONS SHOULD ASCERTAIN THE OPERATIONAL CONDITION, SAFETY OF THE FACILITY AND THE EFFECTIVENESS OF THE PREVENTATIVE MAINTENANCE PROGRAM. BASED ON THE INSPECTION RESULTS, AN INSPECTION REPORT SHOULD BE GENERATED LISTING POTENTIAL MAINTENANCE PROBLEMS. IN ADDITION, A RECOMMENDED TIMELINE FOR REPAIR SHOULD BE ESTABLISHED. CORRECTIVE MAINTENANCE SHOULD BE PERFORMED WITHIN THE RECOMMENDED REPAIR PERIOD TO PREVENT FURTHER DAMAGE, OR DECLINE OF THE FACILITY.

INSPECTION RECORD: RECORD SHOULD BE KEPT OF ALL MAINTENANCE WORK AND INSPECTION PERFORMED FOR THE STORMWATER MANAGEMENT FACILITIES. ALONG WITH THE WRITTEN REPORTS, A CHAIN OF COMMAND FOR REPORTING AND RESOLVING MAINTENANCE PROBLEMS SHOULD BE ESTABLISHED.

SURFACE STABILIZATION CRITERIA:

NOTE:
THE FOLLOWING SPECIFICATIONS ARE GENERAL IN NATURE, AND ARE ACCEPTABLE FOR MANY SOIL TYPES. HOWEVER, IT IS RECOMMENDED THAT SOIL EVALUATION / TESTING BE DONE PRIOR TO SEEDING AND MULCHING TO DETERMINE THE PROPER SOIL AMENDMENTS AND APPLICATION RATES FOR THE PROPOSED SEED MIXTURES.

TEMPORARY COVER: FOR EXPOSURE PERIODS UP TO 12 MONTHS.

1. SEED – RATES BASED ON PURE LIVE SEED
   FROM MARCH 15 TO OCTOBER 15: ANNUAL RYEGRASS AT 10 LBS/ACRE (0.23 LB/1,000 SF); PERENNIAL RYEGRASS AT 15 LBS/ACRE (0.34 LB/1,000 SF)
   FROM OCTOBER 16 TO MARCH 14: ANNUAL RYEGRASS AT 10 LBS/ACRE (0.23 LB/1,000 SF)
2. 10-10-10 FERTILIZER: 500 LB/ACRE (12.5 LB/1,000 SF)
3. AGRICULTURAL LIME: 1 TON/ACRE (40 LB/1,000 SF)
4. MULCH – REFER TO MULCH SPECIFICATIONS

PERMANENT COVER: FOR EXPOSURE PERIODS OVER 12 MONTHS

1. SEED – RATES BASED ON PURE LIVE SEED
   FROM MARCH 15 TO MAY 31 & AUGUST 15 TO OCTOBER 15: KENTUCKY BLUEGRASS AT 25 LBS/ACRE (0.57 LB/1,000 SF); PERENNIAL RYEGRASS AT 15 LBS/ACRE (0.34 LB/1,000 SF)
   NOTE: FROM JUNE 1 TO AUGUST 14 AND OCTOBER 16 TO MARCH 14, USE TEMPORARY COVER AND RESEED WITH PERMANENT COVER FROM MARCH 15 TO MAY 31 AND AUGUST 15 TO OCTOBER 15.
2. 10-10-20 FERTILIZER: 1,000 LB/ACRE (25 LB/1,000 SF)
3. AGRICULTURAL LIME: 6 TONS/ACRE (240 LB/1,000 SF)
4. MULCH – REFER TO MULCH SPECIFICATIONS
5. SOD – INSTALL WHERE SPECIFIED ON THE PLANS AND/OR WHERE DESIRED. FOR SPECIFICATIONS AND INSTALLATION PROCEDURES, REFER TO PENNDOT PUBLICATION 408, SECTION 809.

TOP SOIL SPECIFICATIONS:

1. GRADED AREAS SHOULD BE SCARIFIED OR OTHERWISE LOOSENED TO A DEPTH OF 3 TO 5 INCHES TO PERMIT BONDING OF THE TOPSOIL TO THE SURFACE AREAS AND TO PROVIDE A ROUGHENED SURFACE TO PREVENT TOPSOIL FROM SLIDING DOWN SLOPE.
2. TOPSOIL SHOULD BE UNIFORMLY DISTRIBUTED ACROSS THE DISTURBED AREA TO A DEPTH OF 4 TO 8 INCHES MINIMUM -- 2 INCHES ON FILL OUTSLOPES. SPREADING SHOULD BE DONE IN SUCH A MANNER THAT SODDING OR SEEDING CAN PROCEED WITH A MINIMUM OF ADDITIONAL PREPARATION OR TILLAGE. IRREGULARITIES IN THE SURFACE RESULTING FROM TOPSOIL PLACEMENT SHOULD BE CORRECTED IN ORDER TO PREVENT FORMATION OF DEPRESSIONS UNLESS SUCH DEPRESSIONS ARE PART OF THE POST-CONSTRUCTION STORMWATER MANAGEMENT PLAN.
3. TOPSOIL SHOULD NOT BE PLACED WHILE THE TOPSOIL OR SUBSOIL IS IN A FROZEN OR MUDDY CONDITION, WHEN THE SUBSOIL IS EXCESSIVELY WET, OR IN A CONDITION THAT MAY OTHERWISE BE DETRIMENTAL TO PROPER GRADING AND SEEDBED PREPARATION. COMPACTED SOILS SHOULD BE SCARIFIED 6 TO 12 INCHES ALONG CONTOUR WHEREVER POSSIBLE PRIOR TO SEEDING.
4. WHERE EXISTING SITE TOPSOIL IS INSUFFICIENT, ADDITIONAL TOPSOIL SHALL BE FURNISHED FROM OFF-SITE LOCATIONS. TOPSOIL OBTAINED FROM OFF-SITE LOCATIONS SHALL BE A FRIABLE LOAM REASONABLY FREE OF SUBSOIL, CLAY LUMPS, BRUSH, ROOTS, WEEDS, OTHER OBJECTIONABLE VEGETATION, STONES, OTHER FOREIGN MATERIAL GREATER THAN 2 INCHES IN ANY DIMENSION, LITTER, OR OTHER MATERIAL UNSUITABLE OR HARMFUL TO PLANT GROWTH. IN ADDITION, TOPSOIL OBTAINED FROM OFF-SITE LOCATIONS SHALL CONTAIN NOT LESS THAN 2.0% NOR MORE THAN 10.0% ORGANIC MATTER, AS DETERMINED ACCORDING TO AASHTO T 194, SHALL BE TESTED BY AN APPROVED TESTING LABORATORY, AND SHALL MEET THE FOLLOWING GRADATION STANDARDS:

SIEVE	MIN. % PASSING
2 INCHES	100
NO. 4	75
NO. 10	60

MULCH SPECIFICATIONS:

1. ALL SEEDED AREAS SHALL BE MULCHED OR BLANKETED TO MINIMIZE THE POTENTIAL FOR FAILURE TO ESTABLISH AN ADEQUATE VEGETATIVE COVER. MULCHING MAY ALSO BE USED AS A TEMPORARY STABILIZATION OF SOME DISTURBED AREAS IN NON-GERMINATING PERIODS.
2. MULCHES SHALL BE APPLIED AT THE RATES SHOWN:
   HAY OR STRAW:3 TONS/ACRE (140 LB/1,000 SF)
   WOOD CHIPS: 4-6 TONS/ACRE (185-275 LB/1,000 SF)
   HYDROMULCH: 1 TON/ACRE (47 LB/1,000 SF)
3. MULCH SHALL BE ANCHORED OR TACKIFIED IMMEDIATELY AFTER APPLICATION TO PREVENT BEING WINDBLOWN. A TRACTOR-DRAWN IMPLEMENT MAY BE USED TO "CRIMP" THE STRAW OR HAY INTO THE SOIL ABOUT 3 INCHES. THIS METHOD IS LIMITED TO SLOPES NO STEEPER THAN 3H:1V. THE MACHINERY SHALL BE OPERATED ON THE CONTOUR. NOTE: CRIMPING OF HAY OR STRAW BY RUNNING OVER IT WITH TRACKED MACHINERY IS NOT RECOMMENDED.
4. POLYMERIC AND GUM TACKIFIERS MIXED AND APPLIED ACCORDING TO MANUFACTURER'S RECOMMENDATIONS MAY BE USED TO TACK MULCH. AVOID APPLICATION DURING RAIN AND ON WINDY DAYS. A 24-HOUR CURING PERIOD AND A SOIL TEMPERATURE HIGHER THAN 45° ARE TYPICALLY REQUIRED. APPLICATION SHOULD GENERALLY BE HEAVIEST AT EDGES OF SEEDED AREAS AND AT CRESTS OF RIDGES AND BANKS TO PREVENT LOSS BY WIND. THE REMAINDER OF THE AREA SHALL HAVE BINDER APPLIED UNIFORMLY. BINDERS MAY BE APPLIED AFTER MULCH IS SPREAD OR SPRAYED INTO THE MULCH AS IT IS BEING BLOWN ONTO THE SOIL. APPLYING STRAW AND BINDER TOGETHER IS GENERALLY MORE EFFECTIVE.
5. SYNTHETIC BINDERS, OR CHEMICAL BINDERS, MAY BE USED AS RECOMMENDED BY THE MANUFACTURER TO ANCHOR MULCH PROVIDED SUFFICIENT DOCUMENTATION IS PROVIDED TO SHOW THEY ARE NON-TOXIC TO NATIVE PLANT AND ANIMAL SPECIES.
6. MULCH ON SLOPES 8% OR STEEPER SHOULD BE HELD IN PLACE WITH NETTING. LIGHTWEIGHT PLASTIC, FIBER, OR PAPER NETS MAY BE STAPLED OVER THE MULCH ACCORDING TO MANUFACTURER'S RECOMMENDATIONS.
7. SHREDDED PAPER HYDROMULCH SHOULD NOT BE USED ON SLOPES STEEPER THAN 5%. WOOD FIBER HYDROMULCH MAY BE APPLIED ON STEEPER SLOPES PROVIDED TACKIFIER IS USED.

EROSION CONTROL MATTING SPECIFICATIONS:

NOTE: ALL MATTING TO BE AS MANUFACTURED BY NORTH AMERICAN GREEN (N.A.G.), OR AN APPROVED EQUAL. MATTING, INCLUDING STAPLE PATTERN, SHALL BE INSTALLED PER THE MANUFACTURER'S SPECIFICATIONS.

SLOPES 3:1 (H:V) OR STEEPER:

N.A.G. S75BN SPECIFICATIONS:

MATRIX: 0.5 LB/YD^2 STRAW FIBER
NETTING: 9.3 LB/1,000 FT^2 LENO WOVEN 100% BIODEGRADABLE NATURAL ORGANIC FIBER
STITCHING: BIODEGRADABLE THREAD

CHANNELS:

N.A.G. SC150BN SPECIFICATIONS (8' ROLLS):

MATRIX: STRAW FIBER AT 0.35 LB/YD^2; COCONUT FIBER AT .15 LB/YD^2
NETTING: TOP – 9.35 LB/1,000 FT^2 LENO WOVEN 100% BIODEGRADABLE ORGANIC JUTE; BOTTOM – 7.7 LB/1,000 FT^2 100% BIODEGRADABLE ORGANIC JUTE
STITCHING: BIODEGRADABLE THREAD

(OR)

N.A.G. C125BN SPECIFICATIONS (8' ROLLS):

MATRIX: COCONUT FIBER AT .50 LB/YD^2
NETTING: TOP – 9.3 LB/1,000 FT^2 LENO WOVEN 100% BIODEGRADABLE ORGANIC JUTE; BOTTOM – 7.7 LB/1,000 FT^2 100% BIODEGRADABLE ORGANIC JUTE
STITCHING: BIODEGRADABLE THREAD

OFF SITE DISCHARGE ANALYSIS OF STORMWATER TO AREAS THAT ARE NOT SURFACE WATER:

BACKGROUND: THE SHIRTZ FARM 14 LOT SUBDIVISION AND LAND DEVELOPMENT IS LOCATED AT 110 SPROUL ROAD, MALVEN, PA. THE PROPERTY IS LOCATED IN THE R-2 RESIDENTIAL ZONE IN EAST WHITELAND TOWNSHIP, CHESTER COUNTY, PENNSYLVANIA. SINGLE FAMILY HOMES ARE LOCATED ON EITHER SIDE OF THE PROPOSED DEVELOPMENT AND ACROSS THE STREET (NORTH OF THE SITE). A LARGE WOODED AREA IS LOCATED WEST AND SOUTH EAST OF THE SITE AND A LARGE MEADOW AREA IS LOCATED TO THE WEST AND SOUTHWEST OF THE SITE. THE GROSS TRACT AREA IS 10.26 ACRES.

THERE ARE NO RIPARIAN BUFFER, CREEKS, WETLAND, OR DRAINAGE FACILITIES ON SITE. A MAJORITY OF THE SITE IS WOODED WITH THE EXCEPTION OF THE TWO EXISTING HOMES WHICH CONTAIN GRASS AREAS AND DRIVEWAY FRONTAGE ALONG SPROUL ROAD. THERE ARE CURRENTLY NO STORMWATER MANAGEMENT FACILITIES ON SITE. DUE TO A HIGH POINT IN THE MIDDLE OF THE SITE, RUNOFF DRAINS IN A RADIAL DIRECTION TO BOTH THE RIDLEY CREEK AND VALLEY CREEK WATERSHEDS, WHICH ARE CLASSIFIED AS HQ (HIGH QUALITY) AND EV (EXCEPTIONAL VALUE) STREAMS. POI #1, #3 AND #4 DRAIN TO VALLEY CREEK AND #2 DRAINS TO RIDLEY CREEK.

BMP GENERAL SUMMARY: SEVERAL BMP'S (BEST MANAGEMENT PRACTICES) AS INDICATED IN PADEP LATEST STORMWATER MANAGEMENT MANUAL. THE BMP'S PROPOSED FOR THIS SITE INCLUDE INFILTRATION FACILITIES, VEGETATIVE SWALES, LANDSCAPE RESTORATION, AMENDED SOIL ABOVE INFILTRATION FACILITIES AND WATER QUALITY INLETS AT ALL UPSTREAM INLETS THAT DISCHARGE TO AN INFILTRATION FACILITY. WATER QUALITY INLET INSERTS ARE PROVIDED FOR RUNOFF PRETREATMENT PRIOR TO INFILTRATION FOR ALL BMP'S.

IN GENERAL, THE PROJECT PROPOSES TO DIRECT RUNOFF FROM IMPERVIOUS SURFACES TO VEGETATIVE SWALES AND PERMANENT STORMWATER MANAGEMENT INFILTRATION FACILITIES WITH AMENDED SOILS. ONCE DIRECTED TO THESE FACILITIES, RUNOFF WILL BE MOSTLY INFILTRATED INTO THE GROUND FOR FREQUENT SMALL INTENSITY STORM EVENTS. THEREFORE, NO ADVERSE THERMAL IMPACTS TO THE RECEIVING WATERS ARE ANTICIPATED. PLEASE SEE THE PCSWM PLAN AND SEPARATE EROSION AND SEDIMENT CONTROL PLAN FOR LOCATION OF BMP'S. IN ADDITION, PLEASE THE PCSWM DETAILS AND NOTES PLANS AND SEPARATE EROSION AND SEDIMENT CONTROL DETAILS AND NOTES PLANS FOR APPROPRIATE BMP AND E&S CONSTRUCTION METHODS.

THERE IS ONE LARGE "MAIN INFILTRATION FACILITY" AT THE SITE ENTRANCE AND SEVERAL ON-LOT INFILTRATION FACILITIES. THE MAIN INFILTRATION FACILITY (LOCATED AT THE SITE ENTRANCE) RECEIVES RUNOFF FROM THE PROPOSED CUL-DE-SAC AND RUNOFF FROM A MAJORITY OF THE FRONT YARDS, ROOFS AND DRIVEWAYS AREAS ADJACENT TO THE CUL-DE-SAC.

ALL PROPOSED INFILTRATION FACILITIES ARE DESIGNED TO STORES/INFILTRATES THE ENTIRE 2-YEAR EVENT AND DESIGNED SO THE POST DEVELOPED PEAK RATE FOR THE 10, 25, 50 AND 100-YEAR STORM EVENS ARE LESS THAN PRE DEVELOPED 25, 50 AND 100-YEAR STORM EVENTS. IN THE EVENT OF A STORM EVENT THAT EXCEEDS A 100 YEAR STORM, THE FACILITIES HAVE BEEN DESIGNED WITH AN OVERALL FLOW PIPE THAT DIRECTS NEGLIGIBLE OVERFLOW TO AREAS ON SITE TO MIMIC CURRENT PRE DEVELOPED FLOW CONDITIONS. IT IS IMPORTANT TO NOTE THAT IN ADDITION TO THE PROPOSED IMPERVIOUS AREA ASSOCIATED WITH EACH ON-LOT HOUSE AND DRIVEWAY, STORMWATER MANAGEMENT HAS BEEN OVER DESIGNED TO INCLUDE AN ADDITIONAL 750 SF OF IMPERVIOUS SURFACE FOR FUTURE PATIO/DECK AREAS FOR EACH INDIVIDUAL LOT.

DEWATERING CALCULATIONS ARE INCLUDED IN THIS PCSWM REPORT AND INDICATE THAT ALL PROPOSED INFILTRATION FACILITIES DRAIN IN LESS THAN A 48 HOUR PERIOD. FOR A MAJORITY OF THE PROPOSED DWELLINGS, ROOF DRAINS HAVE BEEN DESIGNED TO DAYLIGHT TO THE FINAL SITE GRADING ELEVATION. RUNOFF FROM THESE ROOF LEADERS WILL FLOW OVERLAND TO VARIOUS VEGETATED SWALES AND INFILTRATION BEDS WITH AMENDED SOILS. IT SHOULD BE NOTED THAT ALL ROOF DRAINS (WHETHER THEY ARE DESIGNED TO DAYLIGHT OR CONNECT DIRECTLY TO THE PROPOSED ON LOT INFILTRATION BEDS), WERE DESIGNED TO DIRECT 100% OF ROOF AREA AND CONVEYED TO INFILTRATION FACILITIES. THE INFILTRATION FACILITIES WERE DESIGNED ASSUMING A ROCK VOID RATIO OF 40%.

DURING THE DESIGN PROCESS, WE EVALUATED THE VOLUME, RATE AND FREQUENCY OF PRE-CONSTRUCTION, CONSTRUCTION AND POST CONSTRUCTION STORMWATER DISCHARGES FROM THE SITE. IN ADDITION, THE PLANS WERE DESIGNED WITH SEVERAL BMP'S TO AVOID, MINIMIZE AND OR MITIGATE STORMWATER DISCHARGES TO PREVENT ACCELERATED EROSION OR DAMAGE TO DOWNSTREAM OR ADJACENT PROPERTIES.

SPECIFIC BMP ANALYSIS (PER POI):
VALLEY CREEK WATERSHED – THE SUMMARY OF THE NET CHANGE OF RUNOFF FOR POI #1, #3 AND #4 YIELDS LESS POST DEVELOPED RUNOFF RATES THEN PRE DEVELOPED RUN FLOWING TO VALLEY CREEK WATERSHED (2-100 YEAR STORM EVENTS).

POI #1: THERE ARE TWO PROPOSED INFILTRATION FACILITIES (MAIN BED AND BED #11). THE PROPOSED BEDS HAVE BEEN DESIGNED WITH AMENDED SOIL OVER THE BED AND A MEADOW SEED MIX AT THE GROUND SURFACE OVER THE BED AREAS. A VEGETATIVE SWALE IS PROPOSED TO CAPTURE RUNOFF AND DIRECT RUNOFF TO BED #11. ADDITIONALLY, LANDSCAPE RESTORATION IS PROPOSED AROUND THE PROPERTY LINE IN THE VICINITY OF THE PROPOSED BEDS.

THERE IS MINIMAL OVERFLOW (POST DEVELOPED FLOW IS LESS THAN PRE DEVELOPED FLOW) FROM THE MAIN INFILTRATION FACILITY AT THE SITE ENTRANCE THAT IS BEING DIRECTED TO AN EXISTING STORM SEWER SYSTEM ALONG SPROUL ROAD. THE APPLICANT HAD PREVIOUSLY RECEIVED AN APPROVED PADOT HOP PERMIT FOR THE PROPOSED STORM SEWER CONNECTION TO THE EXISTING STORM SEWER SYSTEM ALONG SPROUL ROAD. HOWEVER, THE PROJECT SAT DORMANT SINCE 2008. A "RENEWED" PADOT HIGHWAY OCCUPANCY PERMIT IS CURRENTLY PENDING. PLEASE SEE THE PCSWM PLAN FOR THE LOCATION OF ALL BMP'S AND THE PROPOSED STORM SEWER CONNECTION TO THE EXISTING STORM SEWER SYSTEM ALONG SPROUL ROAD.

POI #3: THERE ARE THREE PROPOSED INFILTRATION FACILITIES (BEDS 3, 4/5 AND 8/9/10). THE PROPOSED BEDS HAVE BEEN DESIGNED WITH AMENDED SOIL OVER THE BED AND A MEADOW SEED MIX AT THE GROUND SURFACE OVER THE BED AREA. SEVERAL VEGETATIVE SWALES ARE PROPOSED TO CAPTURE RUNOFF AND DIRECT RUNOFF TO THESE BEDS. ADDITIONALLY, LANDSCAPE RESTORATION IS PROPOSED AROUND THE PROPERTY LINE IN THE VICINITY OF THE PROPOSED BEDS. IF A 100 YEAR OR GREATER STORM EVENT OCCURS, OVERFLOW FROM THE BEDS WILL OVERFLOW TOWARD FRAZIER ROAD AND TO AN EXISTING PIPE CULVERT UNDER KING ROAD, APPROXIMATELY 1,360 FEET IN FLOW LENGTH.

POI #4: THERE IS ONE PROPOSED INFILTRATION FACILITY (BED #1). THE PROPOSED BED HAS BEEN DESIGNED WITH AMENDED SOIL OVER THE BEDS AND A MEADOW SEED MIX AT THE GROUND SURFACE OVER THE BED AREA. A VEGETATIVE SWALE IS PROPOSED TO CAPTURE RUNOFF AND DIRECT RUNOFF ALL THE BED. ADDITIONALLY, LANDSCAPE RESTORATION IS PROPOSED AROUND THE PROPERTY LINE IN THE VICINITY OF THE PROPOSED BED. IF A 100 YEAR OR GREATER STORM EVENT OCCURS, OVERFLOW FROM BED 1 WILL FLOW DOWN SPROUL ROAD TO AN EXISTING INLET AT THE RAILROAD TRACK, APPROXIMATELY 1,100 FEET IN FLOW LENGTH.

RIDLEY CREEK WATERSHED – THE NET CHANGE OF RUNOFF FOR POI #2 YIELDS LESS POST DEVELOPED RUNOFF RATES THEN PRE DEVELOPED RUN FLOWING TO VALLEY CREEK WATERSHED (2-100 YEAR STORM EVENTS).

POI #2: THERE IS ONE PROPOSED INFILTRATION FACILITY (BED #8/9/10). THE PROPOSED BED HAS BEEN DESIGNED WITH AMENDED SOIL OVER THE BED AND A MEADOW SEED MIX AT THE GROUND SURFACE OVER THE BED AREA. SEVERAL VEGETATIVE SWALES ARE PROPOSED TO CAPTURE RUNOFF AND DIRECT RUNOFF TO BED #8/9/10. ADDITIONALLY, LANDSCAPE RESTORATION IS PROPOSED AROUND THE PROPERTY LINE IN THE VICINITY OF THE PROPOSED BEDS. IF A 100 YEAR OR GREATER STORM EVENT OCCURS, OVERFLOW FROM 8/9/10 WILL OVERFLOW TOWARD KING ROAD TO AN EXISTING PIPE CULVERT UNDER KING ROAD, APPROXIMATELY 1,500 FEET IN FLOW LENGTH.

ANTIDEGRADATION ANALYSIS: THE FOLLOWING NARRATIVE IS REQUIRED PER SECTION E, (PART 1) OF THE NOI PERMIT APPLICATION:

E & S PLAN NONDISCHARGING BMP'S: AS REQUIRED BY SECTION E, AN EXPLANATION IS TO BE PROVIDED FOR ALL BMP'S NOT CHECKED IN THIS SECTION. ALTERNATIVE SITING'S, INCLUDING ALTERNATIVE LOCATIONS, ALTERNATIVE CONFIGURATIONS AS WELL AS ALTERNATIVE LOCATION OF DISCHARGES AND LOW IMPACT DEVELOPMENT DESIGN WERE CONSIDERED DURING THE DESIGN PROCESS.

THE PROPOSED DESIGN YIELDED THE BEST SITE LAYOUT BASED ON THE EXISTING SITE TOPOGRAPHY AS WELL AS THE DISPERSED LOCATION OF PROPOSED INFILTRATION FACILITIES, VEGETATIVE SWALES AND AMENDED SOILS (TO BE INSTALLED ABOVE INFILTRATION FACILITIES). THE PROPOSED DESIGN INCLUDED SAVING AS MANY TREES AND WOODED AREAS, AS POSSIBLE, ALONG THE PROPERTY LINE. WE ARE PROPOSING VEGETATIVE SWALES AND AMENDED SOILS IN PLACE OF AREAS WHERE TREE ARE TO BE REMOVED. THE LIMIT AND EXTENT OF CONSTRUCTION WILL BE PERFORMED BASED ON THE DETAILED CONSTRUCTION SEQUENCE THAT IS PROVIDED ON THE PLANS. THERE ARE NO RIPARIAN BUFFERS OR RIPARIAN FOREST BUFFERS ON OR ADJACENT TO THE SITE.

PCSM PLAN NONDISCHARGING BMP'S:AS REQUIRED BY SECTION E, AN EXPLANATION IS TO BE PROVIDED FOR ALL BMP'S NOT CHECKED IN THIS SECTION. ALTERNATIVE SITING'S, INCLUDING ALTERNATIVE LOCATIONS, ALTERNATIVE CONFIGURATIONS AS WELL AS ALTERNATIVE LOCATION OF DISCHARGES. THE PROPOSED DESIGN WAS THE BEST ALTERNATIVE DESIGN BASED ON THE EXISTING SITE TOPOGRAPHY AS WELL AS THE DISPERSED LOCATION OF PROPOSED INFILTRATION FACILITIES, VEGETATIVE SWALES AND AMENDED SOILS. A NON-DISCHARGE ALTERNATE DOES NOT EXIST.

THE APPLICANT AND DESIGN ENGINEER ALSO INVESTIGATED LID DESIGNS AND WATER REUSE FOR THE SITE. HOWEVER, IN ORDER TO MEET VARIOUS TOWNSHIP REQUIREMENTS AND ADDRESS SITE CONSTRAINTS, LID AND WATER REUSE WERE NOT REALISTIC DESIGN OPTIONS. THE PROPOSED DESIGN DOES INCORPORATE VARIOUS BMP DESIGNS SUCH AS THE CONSTRUCTION OF SEVERAL VEGETATIVE SWALE, AMENDED SOILS AND INFILTRATION FACILITIES.

THERE ARE NO RIPARIAN BUFFERS OR RIPARIAN FOREST BUFFERS ON OR ADJACENT TO THE SITE.

ORIGINAL PLANS BEAR A REGISTRATION SEAL IN RED INK.

COMMONWEALTH OF PENNSYLVANIA REGISTERED PROFESSIONAL ENGINEER ERIC J. JANETKA No. 050549-E

KELLY & CLOSE ENGINEERS
CONSULTING ENGINEERS & SURVEYORS
The Summit at Brandywine
1786 Wilmington Pike/Suite 300
Glen Mills, Pennsylvania 19342
610.358.9363 fax 610.358.9376

REV.	DATE	DESCRIPTION	BY
3	2/8/2019	REVISE PLAN PER TOWNSHIP CONSULTANT REVIEWS, NPDES PERMIT REVIEW	E.J.J.
2	10/5/2018	REVISED GRADING; REVISED SANITARY SEWER DESIGN; REVISED SWM	E.J.J.
1	9/10/2014	REVISED PER TWP 8-11-14 AND 8-18-14 REVIEW LETTERS	E.J.J.

date:	7/21/2014
scale:	AS NOTED
drawn by:	M.J.B.
checked by:	E.J.J.
dwg. name:	F-Dtls-EnS.dwg
project no.:	N/A

SHIRTZ FARM
110 SPROUL ROAD
EAST WHITELAND TOWNSHIP
CHESTER COUNTY, PENNSYLVANIA

EROSION AND SEDIMENTATION CONROL NOTES

This document and all information and work product represented by and contained herein, is the sole and exclusive property of James C. Kelly & Associates, Inc., t/a Kelly & Close Engineers. The information contained herein is licensed only for limited use by the intended recipient, and no license, permission or authority is extended, directly or implied, to any party without express written permission of James C. Kelly & Associates, Inc.

Copyright, 2015, James C. Kelly & Associates, Inc. All rights reserved

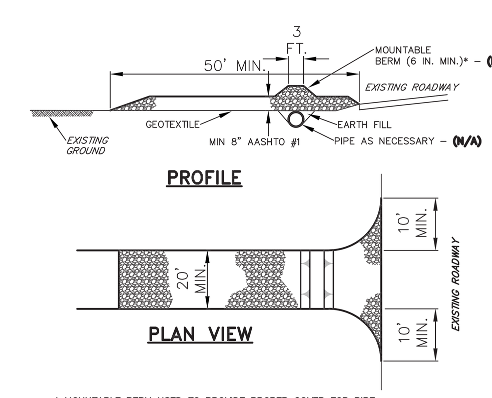

NOTES:

- REMOVE TOPSOIL PRIOR TO INSTALLATION OF ROCK CONSTRUCTION ENTRANCE. EXTEND ROCK OVER FULL WIDTH OF ENTRANCE.
- RUNOFF SHALL BE DIVERTED FROM ROADWAY TO A SUITABLE SEDIMENT REMOVAL BMP PRIOR TO ENTERING ROCK CONSTRUCTION ENTRANCE.
- **(N/A)** – MOUNTABLE BERM SHALL BE INSTALLED WHEREVER OPTIONAL CULVERT PIPE IS USED AND PROPER PIPE COVER AS SPECIFIED BY MANUFACTURER IS NOT OTHERWISE PROVIDED. PIPE SHALL BE SIZED APPROPRIATELY FOR SIZE OF DITCH BEING CROSSED.
- MAINTENANCE: ROCK CONSTRUCTION ENTRANCE THICKNESS SHALL BE CONSTANTLY MAINTAINED TO THE SPECIFIED DIMENSIONS BY ADDING ROCK. A STOCKPILE SHALL BE MAINTAINED ON SITE FOR THIS PURPOSE. ALL SEDIMENT DEPOSITED ON PAVED ROADWAYS SHALL BE REMOVED AND RETURNED TO THE CONSTRUCTION SITE IMMEDIATELY. IF EXCESSIVE AMOUNTS OF SEDIMENT ARE BEING DEPOSITED ON ROADWAY, EXTEND LENGTH OF ROCK CONSTRUCTION ENTRANCE BY 50 FOOT INCREMENTS UNTIL CONDITION IS ALLEVIATED OR INSTALL WASH RACK. WASHING THE ROADWAY OR SWEEPING THE DEPOSITS INTO ROADWAY DITCHES, SEWERS, CULVERTS, OR OTHER DRAINAGE COURSES IS NOT ACCEPTABLE.
- **WATERBAR TO BE INSTALLED ABUTTING ENTRANCE (SEE DETAIL).**

STANDARD CONSTRUCTION DETAIL #3-1
ROCK CONSTRUCTION ENTRANCE
N.T.S.

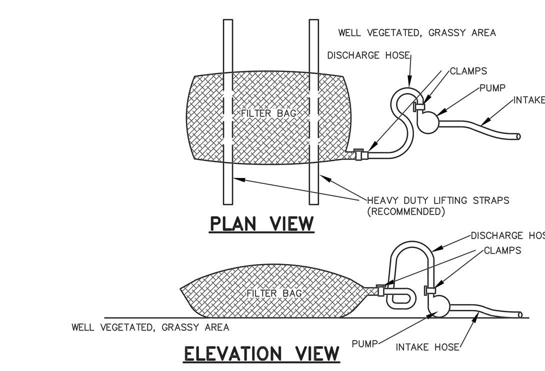

NOTES:

- LOW VOLUME FILTER BAGS SHALL BE MADE FROM NON-WOVEN GEOTEXTILE MATERIAL SEWN WITH HIGH STRENGTH, DOUBLE STITCHED "J" TYPE SEAMS. THEY SHALL BE CAPABLE OF TRAPPING PARTICLES LARGER THAN 150 MICRONS. HIGH VOLUME FILTER BAGS SHALL BE MADE FROM WOVEN GEOTEXTILES THAT MEET THE FOLLOWING STANDARDS:

PROPERTY	TEST METHOD	MINIMUM STANDARD
AVG. WIDE WIDTH STRENGTH	ASTM D-4884	60 LB/IN
GRAB TENSILE	ASTM D-4632	205 LB
PUNCTURE	ASTM D-4833	110 LB
MULLEN BURST	ASTM D-3786	350 PSI
UV RESISTANCE	ASTM D-4355	70%
AOS % RETAINED	ASTM D-4751	80 SIEVE

- A SUITABLE MEANS OF ACCESSING THE BAG WITH MACHINERY REQUIRED FOR DISPOSAL PURPOSES SHALL BE PROVIDED. FILTER BAGS SHALL BE REPLACED WHEN THEY BECOME 1/2 FULL OF SEDIMENT. SPARE BAGS SHALL BE KEPT AVAILABLE FOR REPLACEMENT OF THOSE THAT HAVE FAILED OR ARE FILLED. BAGS SHALL BE PLACED ON STRAPS TO FACILITATE REMOVAL UNLESS BAGS COME WITH LIFTING STRAPS ALREADY ATTACHED.
- BAGS SHALL BE LOCATED IN WELL-VEGETATED (GRASSY) AREA, AND DISCHARGE ONTO STABLE, EROSION RESISTANT AREAS. WHERE THIS IS NOT POSSIBLE, A GEOTEXTILE UNDERLAYMENT AND FLOW PATH SHALL BE PROVIDED. BAGS MAY BE PLACED ON FILTER STONE TO INCREASE DISCHARGE CAPACITY. BAGS SHALL NOT BE PLACED ON SLOPES GREATER THAN 5%. FOR SLOPES EXCEEDING 5%, CLEAN ROCK OR OTHER NON-ERODIBLE AND NON-POLLUTING MATERIAL MAY BE PLACED UNDER THE BAG TO REDUCE SLOPE STEEPNESS.
- NO DOWNSLOPE SEDIMENT BARRIER IS REQUIRED FOR MOST INSTALLATIONS. COMPOST BERM OR COMPOST FILTER SOCK SHALL BE INSTALLED BELOW BAGS LOCATED IN HQ OR EV WATERSHEDS, WITHIN 50 FEET OF ANY RECEIVING SURFACE WATER OR WHERE GRASSY AREA IS NOT AVAILABLE.
- THE PUMP DISCHARGE HOSE SHALL BE INSERTED INTO THE BAGS IN THE MANNER SPECIFIED BY THE MANUFACTURER AND SECURELY CLAMPED. A PIECE OF PVC PIPE IS RECOMMENDED FOR THIS PURPOSE.
- THE PUMPING RATE SHALL BE NO GREATER THAN 750 GPM OR 1/2 THE MAXIMUM SPECIFIED BY THE MANUFACTURER, WHICHEVER IS LESS. PUMP INTAKES SHALL BE FLOATING AND SCREENED.
- FILTER BAGS SHALL BE INSPECTED DAILY. IF ANY PROBLEM IS DETECTED, PUMPING SHALL CEASE IMMEDIATELY AND NOT RESUME UNTIL THE PROBLEM IS CORRECTED.

STANDARD CONSTRUCTION DETAIL #3-16
PUMPED WATER FILTER BAG
N.T.S.

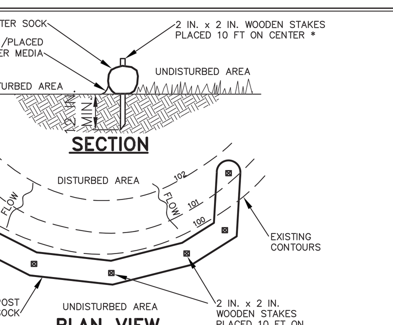

* FOR COMPOST FILTER SOCKS PLACED ON PAVED SURFACES, CONCRETE BLOCKS SHOULD BE USED IMMEDIATELY DOWNSLOPE OF THE SOCKS IN LIEU OF STAKES. CONCRETE BLOCK PLACEMENT SHALL FOLLOW THE SAME INTERVAL AS RECOMMENDED WITH STAKING.

NOTES:

- SOCK FABRIC SHALL MEET STANDARDS OF TABLE 4.1 OF THE PA DEP EROSION CONTROL MANUAL. COMPOST SHALL MEET THE STANDARDS OF TABLE 4.2 OF THE PA DEP EROSION CONTROL MANUAL.
- COMPOST FILTER SOCK SHALL BE PLACED AT EXISTING LEVEL GRADE. BOTH ENDS OF THE BARRIER SHALL BE EXTENDED AT LEAST 8 FEET UP SLOPE AT 45 DEGREES TO THE MAIN BARRIER ALIGNMENT. MAXIMUM SLOPE LENGTH ABOVE ANY BARRIER SHALL NOT EXCEED THAT SPECIFIED FOR THE SIZE OF THE SOCK AND THE SLOPE OF ITS TRIBUTARY AREA.
- TRAFFIC SHALL NOT BE PERMITTED TO CROSS COMPOST FILTER SOCKS.
- ACCUMULATED SEDIMENT SHALL BE REMOVED WHEN IT REACHES 1/2 THE ABOVE GROUND HEIGHT OF THE BARRIER AND DISPOSED IN THE MANNER DESCRIBED ELSEWHERE IN THE PLAN.
- COMPOST FILTER SOCKS SHALL BE INSPECTED WEEKLY AND AFTER EACH RUNOFF EVENT. DAMAGED SOCKS SHALL BE REPAIRED ACCORDING TO MANUFACTURER'S SPECIFICATIONS OR REPLACED WITHIN 24 HOURS OF INSPECTION.
- BIODEGRADABLE COMPOST FILTER SOCKS SHALL BE REPLACED AFTER 6 MONTHS; PHOTODEGRADABLE SOCKS AFTER 1 YEAR. POLYPROPYLENE SOCKS SHALL BE REPLACED ACCORDING TO MANUFACTURER'S RECOMMENDATIONS.
- UPON STABILIZATION OF THE AREA TRIBUTARY TO THE SOCK, STAKES SHALL BE REMOVED. THE SOCK MAY BE LEFT IN PLACE AND VEGETATED OR REMOVED. IN THE LATTER CASE, THE MESH SHALL BE CUT OPEN AND THE MULCH SPREAD AS A SOIL SUPPLEMENT.

SOCK No.	DIA. In.	LOCATION	SLOPE PERCENT	SLOPE LENGTH ABOVE BARRIER (FT.)
CFS-1	12"	LOTS 11 thru 14	2.67%	300'
CFS-2	12"	LOTS 8 thru 10	3.60%	250'
CFS-3	12"	LOTS 3 thru 7	2.25%	400'
CFS-4	12"	OPEN SPACE	2.33%	300'
CFS-5	12"	LOTS 1 and 2	2.92%	240'

INTERIM

CFS-6	12"	LOTS 12 and 13	4.11%	220'
CFS-7	12"	LOT 11	2.60%	265'
CFS-8	12"	LOTS 8, 9 and 10	2.92%	170'
CFS-9	12"	LOT 7	4.54%	200
CFS-10	12"	LOT 6	4.57%	310'
CFS-11	12"	LOT 4	3.11%	255'

STANDARD CONSTRUCTION DETAIL #4-1
COMPOST FILTER SOCK
N.T.S.

TABLE 4.1
Compost Sock Fabric Minimum Specifications

Material Type	3 mil HDPE	5 mil HDPE	5 mil HDPE	Multi-Filament Polypropylene (MFPP)	Heavy Duty Multi-Filament Polypropylene (HDMFPP)
Material Characteristics	Photo-degradable	Photo-degradable	Bio-degradable	Photo-degradable	Photo-degradable
Sock Diameters	12" 18"	12"	12"	12"	12"
		18"	18"	18"	18"
		24"	24"	24"	24"
		32"	32"	32"	32"
Mesh Opening	3/8"	3/8"	3/8"	3/8"	1/8"
Tensile Strength		26 psi	26 psi	44 psi	202 psi
Ultraviolet Stability % Original Strength (ASTM G-155)	23% at 1000 hr.	23% at 1000 hr.		100% at 1000 hr.	100% at 1000 hr.
Minimum Functional Longevity	6 months	9 months	6 months	1 year	2 years
Two-ply systems					
Inner Containment Netting			HDPE biaxial net		
			Continuously wound		
			Fusion-welded junctures		
			3/4" X 3/4" Max. aperture size		
Outer Filtration Mesh			Composite Polypropylene Fabric(Woven layer and non-woven fleece mechanically fused via needle punch)		
			3/16" Max. aperture size		
Sock fabrics composed of burlap may be used on projects lasting 6 months or less.					

Filtrexx & JMD

COMPOST SPECIFICATIONS:

COMPOST SHOULD BE A WELL DECOMPOSED, WEED-FREE ORGANIC MATTER DERIVED FROM AGRICULTURE, FOOD, STUMP GRINDINGS, AND YARD OR WOOD/BARK ORGANIC MATTER SOURCES. THE COMPOST SHOULD BE AEROBICALLY COMPOSTED. THE COMPOST SHOULD POSSESS NO OBJECTIONABLE ODORS AND SHOULD BE REASONABLY FREE (<1% BY DRY WEIGHT) OF MAN-MADE FOREIGN MATTER. THE COMPOST PRODUCT SHOULD NOT RESEMBLE THE RAW MATERIAL FROM WHICH IT WAS DERIVED. WOOD AND BARK CHIPS, GROUND CONSTRUCTION DEBRIS OR REPROCESSED WOOD PRODUCTS ARE NOT ACCEPTABLE AS THE ORGANIC COMPONENT OF THE MIX. COMPOST SHALL MEET THE STANDARDS OF TABLE 4.2 OF THE PA DEP EROSION CONTROL MANUAL, INCLUDED BELOW:

TABLE 4.2
Compost Standards

Organic Matter Content	80% – 100% (dry weight basis)
Organic Portion	Fibrous and elongated
pH	5.5-8.0
Moisture Content	35% – 55%
Particle Size	98% pass through 1" screen
Soluble Salt Concentration	5.0 Ds/m (mmhos/cm) Maximum

Filtrexx

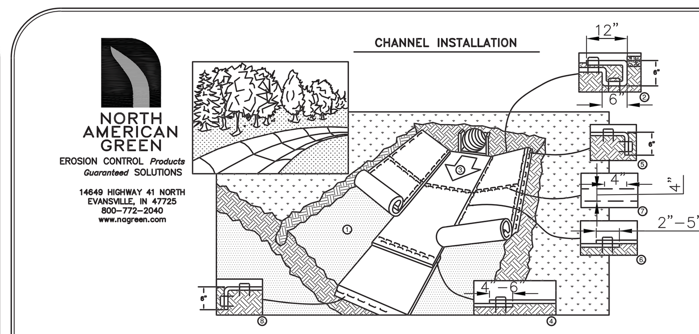

1. PREPARE SOIL BEFORE INSTALLING ROLLED EROSION CONTROL PRODUCTS (RECP's), INCLUDING ANY NECESSARY APPLICATION OF LIME, FERTILIZER, AND SEED. NOTE: WHEN USING CELL-O-SEED DO NOT SEED PREPARED AREA. CELL-O-SEED MUST BE INSTALLED WITH PAPER SIDE DOWN.
2. BEGIN AT THE TOP OF THE CHANNEL BY ANCHORING THE RECP's IN A 6" DEEP X 6" WIDE TRENCH WITH APPROXIMATELY 12" OF RECP's EXTENDED BEYOND THE UP-SLOPE PORTION OF THE TRENCH. ANCHOR THE RECP's WITH A ROW OF STAPLES/STAKES APPROXIMATELY 12" APART IN THE BOTTOM OF THE TRENCH. BACKFILL AND COMPACT THE TRENCH AFTER STAPLING. APPLY SEED TO COMPACTED SOIL AND FOLD REMAINING 12" PORTION OF RECP's BACK OVER SEED AND COMPACTED SOIL. SECURE RECP's OVER COMPACTED SOIL WITH A ROW OF STAPLES/STAKES SPACED APPROXIMATELY 12" ACROSS THE WIDTH OF THE RECP's.
3. ROLL CENTER RECP's IN DIRECTION OF WATER FLOW IN BOTTOM OF CHANNEL. RECP's WILL UNROLL WITH APPROPRIATE SIDE AGAINST THE SOIL SURFACE. ALL RECP's MUST BE SECURELY FASTENED TO SOIL SURFACE BY PLACING STAPLES/STAKES IN APPROPRIATE LOCATIONS AS SHOWN IN THE STAPLE PATTERN GUIDE. WHEN USING THE DOT SYSTEM TM, STAPLES/STAKES SHOULD BE PLACED THROUGH EACH OF THE COLORED DOTS CORRESPONDING TO THE APPROPRIATE STAPLE PATTERN.
4. PLACE CONSECUTIVE RECP's END OVER END (SHINGLE STYLE) WITH A 4" – 6" OVERLAP. USE A DOUBLE ROW OF STAPLES STAGGERED 4" APART AND 4" ON CENTER TO SECURE RECP's.
5. FULL LENGTH EDGE OF RECP's AT TOP OF SIDE SLOPES MUST BE ANCHORED WITH A ROW OF STAPLES/STAKES APPROXIMATELY 12" APART IN A 6" DEEP X 6" WIDE TRENCH. BACKFILL AND COMPACT THE TRENCH AFTER STAPLING.
6. ADJACENT RECP's MUST BE OVERLAPPED APPROXIMATELY 2" – 5" (DEPENDING ON RECP's TYPE) AND STAPLED.
7. IN HIGH FLOW CHANNEL APPLICATIONS, A STAPLE CHECK SLOT IS RECOMMENDED AT 30 TO 40 FOOT INTERVALS. USE A DOUBLE ROW OF STAPLES STAGGERED 4" APART AND 4" ON CENTER OVER ENTIRE WIDTH OF THE CHANNEL.
8. THE TERMINAL END OF THE RECP's MUST BE ANCHORED WITH A ROW OF STAPLES/STAKES APPROXIMATELY 12" APART IN A 6" DEEP X 6" WIDE TRENCH. BACKFILL AND COMPACT THE TRENCH AFTER STAPLING.

NOTE:
* IN LOOSE SOIL CONDITIONS, THE USE OF STAPLE OR STAKE LENGTHS GREATER THAN 6" MAY BE NECESSARY TO PROPERLY ANCHOR THE RECP's.

CRITICAL POINTS
A. OVERLAPS AND SEAMS
B. PROJECTED WATER LINE
C. CHANNEL BOTTOM/SIDE SLOPE VERTICES

NOTE:
* HORIZONTAL STAPLE SPACING SHOULD BE ALTERED IF NECESSARY TO ALLOW STAPLES TO SECURE THE CRITICAL POINTS ALONG THE CHANNEL SURFACE.
** IN LOOSE SOIL CONDITIONS, THE USE OF STAPLE OR STAKE LENGTHS GREATER THAN 6" MAY BE NECESSARY TO PROPERLY ANCHOR THE RECP's.

EROSION CONTROL MATTING:
CHANNEL INSTALLATION
N.T.S.

REV. 01/05

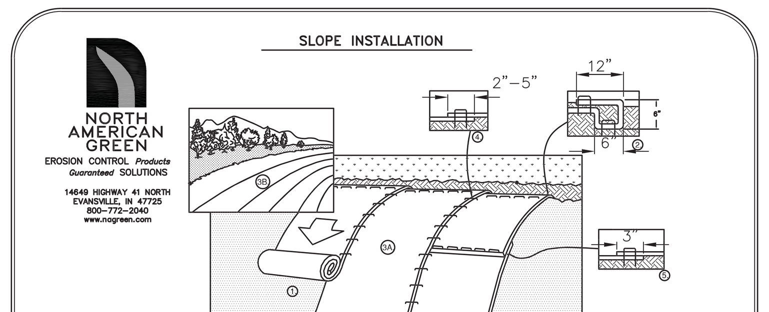

1. PREPARE SOIL BEFORE INSTALLING ROLLED EROSION CONTROL PRODUCTS (RECP's), INCLUDING ANY NECESSARY APPLICATION OF LIME, FERTILIZER, AND SEED.
2. BEGIN AT THE TOP OF THE SLOPE BY ANCHORING THE RECP's IN A 6" DEEP X 6" WIDE TRENCH WITH APPROXIMATELY 12" OF RECP's EXTENDED BEYOND THE UP-SLOPE PORTION OF THE TRENCH. ANCHOR THE RECP's WITH A ROW OF STAPLES/STAKES APPROXIMATELY 12" APART IN THE BOTTOM OF THE TRENCH. BACKFILL AND COMPACT THE TRENCH AFTER STAPLING. APPLY SEED TO COMPACTED SOIL AND FOLD REMAINING 12" PORTION OF RECP's BACK OVER SEED AND COMPACTED SOIL. SECURE RECP's OVER COMPACTED SOIL WITH A ROW OF STAPLES/STAKES SPACED APPROXIMATELY 12" APART ACROSS THE WIDTH OF THE RECP's.
3. ROLL THE RECP's (A.) DOWN OR (B.) HORIZONTALLY ACROSS THE SLOPE. RECP's WILL UNROLL WITH APPROPRIATE SIDE AGAINST THE SOIL SURFACE. ALL RECP's MUST BE SECURELY FASTENED TO SOIL SURFACE BY PLACING STAPLES/STAKES IN APPROPRIATE LOCATIONS AS SHOWN IN THE STAPLE PATTERN GUIDE. WHEN USING OPTIONAL DOT SYSTEM TM, STAPLES/STAKES SHOULD BE PLACED THROUGH EACH OF THE COLORED DOTS CORRESPONDING TO THE APPROPRIATE STAPLE PATTERN.
4. THE EDGES OF PARALLEL RECP's MUST BE STAPLED WITH APPROXIMATELY 2"-5" OVERLAP DEPENDING ON RECP's TYPE.
5. CONSECUTIVE RECP's SPLICED DOWN THE SLOPE MUST BE PLACED END OVER END (SHINGLE STYLE) WITH AN APPROXIMATE 3" OVERLAP. STAPLE THROUGH OVERLAPPED AREA, APPROXIMATELY 12" APART ACROSS ENTIRE RECP's WIDTH.

NOTE:
*IN LOOSE SOIL CONDITIONS, THE USE OF STAPLE OR STAKE LENGTHS GREATER THAN 6" MAY BE NECESSARY TO PROPERLY SECURE THE RECP's.

STAPLE PATTERN

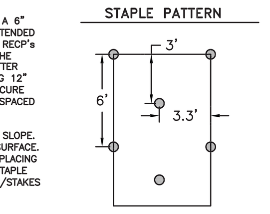

0.7 STAPLES PER SQ. YD.

EROSION CONTROL MATTING:
SLOPE INSTALLATION
N.T.S.

REV. 01/05

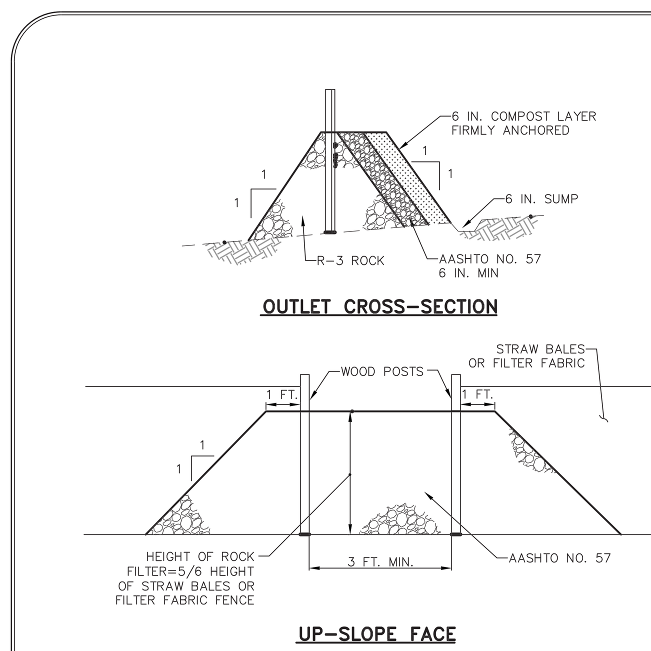

NOTES:

A ROCK FILTER OUTLET SHALL BE INSTALLED WHERE FAILURE OF A SILT FENCE OR STRAW BALE BARRIER HAS OCCURRED DUE TO CONCENTRATED FLOW. ANCHORED COMPOST LAYER SHALL BE USED ON UPSLOPE.

SEDIMENT SHALL BE REMOVED WHEN ACCUMULATIONS REACH 1/3 THE HEIGHT OF THE OUTLET.

STANDARD CONSTRUCTION DETAIL #4-6
ROCK FILTER OUTLET
N.T.S.

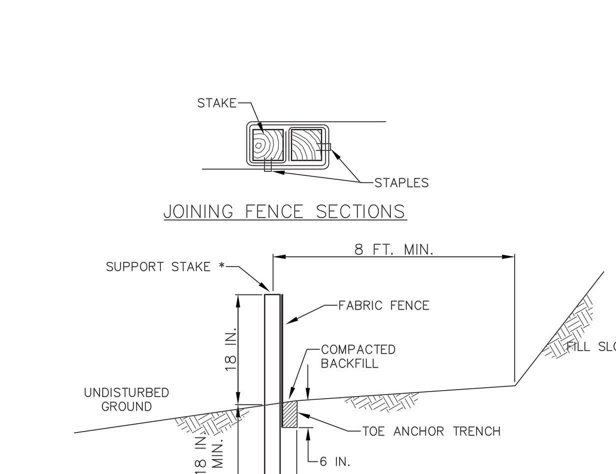

NOTES:

FABRIC SHALL HAVE THE MINIMUM PROPERTIES AS SHOWN IN TABLE 4.3 OF THE PA DEP EROSION CONTROL MANUAL.

FABRIC WIDTH SHALL BE 30 IN. MINIMUM. STAKES SHALL BE HARDWOOD OR EQUIVALENT STEEL (U OR T) STAKES.

SILT FENCE SHALL BE PLACED AT LEVEL EXISTING GRADE. BOTH ENDS OF THE FENCE SHALL BE EXTENDED AT LEAST 8 FEET UP SLOPE AT 45 DEGREES TO THE MAIN FENCE ALIGNMENT.

SEDIMENT SHALL BE REMOVED WHEN ACCUMULATIONS REACH HALF THE ABOVE GROUND HEIGHT OF THE FENCE.

ANY SECTION OF SILT FENCE WHICH HAS BEEN UNDERMINED OR TOPPED SHALL BE IMMEDIATELY REPLACED WITH A ROCK FILTER OUTLET (STANDARD CONSTRUCTION DETAIL # 4-6).

FENCE SHALL BE REMOVED AND PROPERLY DISPOSED OF WHEN TRIBUTARY AREA IS PERMANENTLY STABILIZED.

STANDARD CONSTRUCTION DETAIL #4-7
STANDARD SILT FENCE (18" HIGH)
N.T.S.

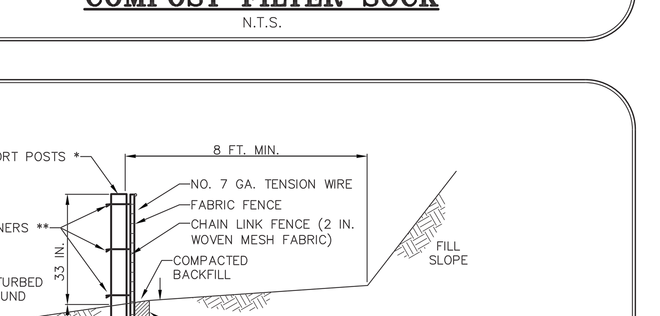

* POSTS SPACED AT 10 FT. MAX. USE 2-1/2 IN. DIA HEAVY DUTY GALVANIZED OR ALUMINUM POSTS.

** CHAIN LINK TO POST FASTENERS SPACED AT 14 IN. MAX. USE NO. 9 GA. ALUMINUM WIRE OR NO. 9 GALVANIZED STEEL WIRE. FABRIC TO CHAIN FASTENERS SPACED AT 24 IN. MAX. ON CENTER.

NOTES:

FABRIC SHALL HAVE THE MINIMUM PROPERTIES AS SHOWN IN TABLE 4.3 OF THE PA DEP EROSION CONTROL MANUAL.

FABRIC WIDTH SHALL BE 42 IN. MINIMUM.

POSTS SHALL BE INSTALLED USING A POSTHOLE DRILL.

CHAIN LINK SHALL BE GALVANIZED NO. 11.5 GA. STEEL WIRE WITH 2-1/4 IN. OPENING, NO. 11 GA. ALUMINUM COATED STEEL WIRE IN ACCORDANCE WITH ASTM-A-491, OR GALVANIZED NO. 9 GA. STEEL WIRE TOP AND BOTTOM WITH GALVANIZED NO. 11 GA. STEEL INTERMEDIATE WIRES. NO. 7 GAGE TENSION WIRE TO BE INSTALLED HORIZONTALLY THROUGH HOLES AT TOP AND BOTTOM OF CHAIN-LINK FENCE OR ATTACHED WITH HOG RINGS AT 5 FT MAX. CENTERS.

SILT FENCE SHALL BE PLACED AT LEVEL EXISTING GRADE. BOTH ENDS OF THE FENCE SHALL BE EXTENDED AT LEAST 8 FEET UP SLOPE AT 45 DEGREES TO THE MAIN FENCE ALIGNMENT.

SEDIMENT SHALL BE REMOVED WHEN ACCUMULATIONS REACH HALF THE ABOVE GROUND HEIGHT OF THE FENCE.

FENCE SHALL BE REMOVED AND PROPERLY DISPOSED OF WHEN TRIBUTARY AREA IS PERMANENTLY STABILIZED.

STANDARD CONSTRUCTION DETAIL #4-10
SUPER SILT FENCE
N.T.S.

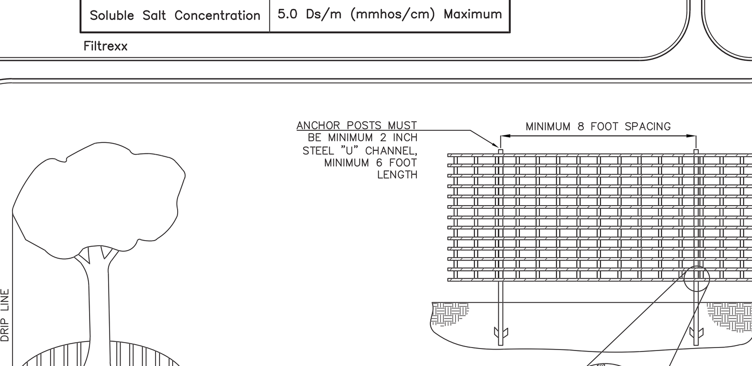

NOTES:

1. FENCING OR BARRIERS SHALL BE PLACED AS MUCH AS IS PRACTICAL AT THE DRIPLINE. LOCATION MAY BE ALTERED TO AVOID INTERFERENCE WITH PROPOSED GRADING AND IMPROVEMENTS AS SHOWN ON THE PLANS.
2. PROTECTION BARRIER SHALL BE 4 FEET HIGH, CONSTRUCTED OF DURABLE AND HIGHLY VISIBLE MATERIAL (PLASTIC ORANGE CONSTRUCTION FENCE OR TENAX ALPI ORANGE OR EQUAL).
3. PROTECTION BARRIERS SHALL BE MAINTAINED THROUGHOUT THE DURATION OF WORK AT THE SITE.
4. ADDITIONAL WARNING SIGNS SHOULD ALSO BE PLACED ON THE FENCING AND IN APPROPRIATE AREAS NEAR THE WORK ZONE.

TREE PROTECTION BARRIER FENCING
N.T.S.

TABLE 4.3
FABRIC PROPERTIES FOR SILT FENCE

FABRIC PROPERTY	MINIMUM ACCEPTABLE VALUE	TEST METHOD
GRAB TENSILE STRENGTH (LB)	120	ASTM D1682
ELONGATION AT FAILURE (%)	20% MAX.	ASTM D1682
MULLEN BURST STRENGTH (PSI)	200	ASTM D3786
TRAPEZOIDAL TEAR STRENGTH (LB)	50	
PUNCTURE STRENGTH (LB)	40	ASTM D751 (MODIFIED)
SLURRY FLOW RATE (GAL/MIN/SF)	0.3	ASTM 5141
EQUIVALENT OPENING SIZE	30	US STD. SIEVE CW-02215
ULTRAVIOLET RADIATION STABILITY (%)	80	ASTM G-26
ADAPTED FROM NEW YORK DEC AND PENNDOT PUB 408.		

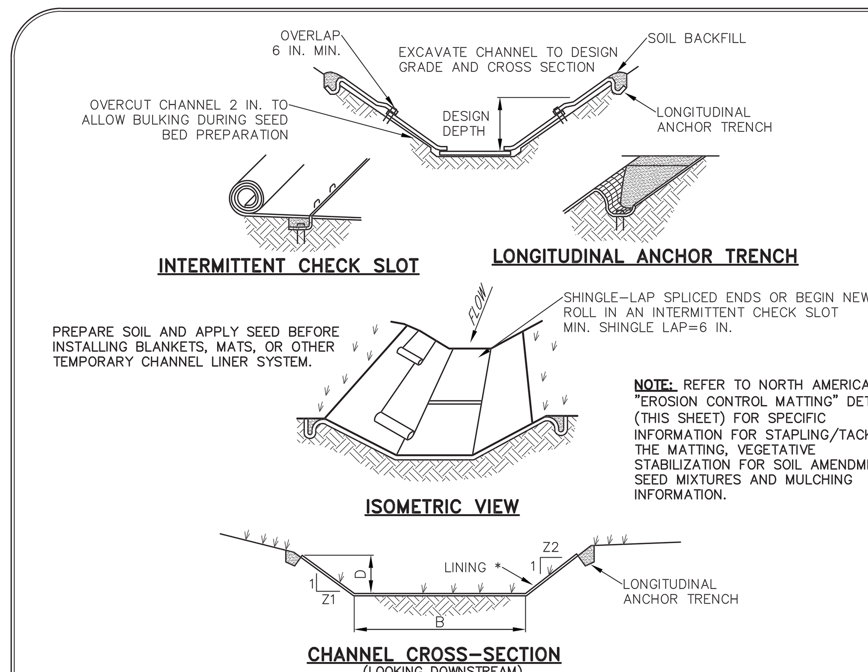

CHANNEL NO.	STATIONS	BOTTOM WIDTH B (FT)	DEPTH D (FT)	TOP WIDTH W (FT)	Z1 (FT)	Z2 (FT)	LINING
#1	ALL STATIONS	2	1.0	8	3	3 (MAX.)	NAG S150BN
#4/5	ALL STATIONS	2.5	1.25	10	3	3 (MAX.)	NAG S150BN
#4-2	ALL STATIONS	2.5	1.0	8.5	3	3 (MAX.)	NAG S150BN
#6/7	ALL STATIONS	2.5	1.25	10	3	3 (MAX.)	NAG S150BN
#8/9	ALL STATIONS	2.5	1.5	11.5	3	3 (MAX.)	NAG S150BN
#10	ALL STATIONS	2.5	1.25	10	3	3 (MAX.)	NAG S150BN
#12/13	ALL STATIONS	2	1.0	8	3	3 (MAX.)	NAG S150BN

NOTES:

1. ANCHOR TRENCHES SHALL BE INSTALLED AT BEGINNING AND END OF CHANNEL IN THE SAME MANNER AS LONGITUDINAL ANCHOR TRENCHES.
2. CHANNEL DIMENSIONS SHALL BE CONSTANTLY MAINTAINED. CHANNEL SHALL BE CLEANED WHENEVER TOTAL CHANNEL DEPTH IS REDUCED BY 25% AT ANY LOCATION.
3. SEDIMENT DEPOSITS SHALL BE REMOVED WITHIN 24 HOURS OF DISCOVERY OR AS SOON AS SOIL CONDITIONS PERMIT ACCESS TO CHANNEL WITHOUT FURTHER DAMAGE. DAMAGED LINING SHALL BE REPAIRED OR REPLACED WITHIN 48 HOURS OF DISCOVERY.
4. NO MORE THAN ONE THIRD OF THE SHOOT (GRASS LEAF) SHALL BE REMOVED IN ANY MOWING. GRASS HEIGHT SHALL BE MAINTAINED BETWEEN 2 AND 3 INCHES UNLESS OTHERWISE SPECIFIED. EXCESS VEGETATION SHALL BE REMOVED FROM PERMANENT CHANNELS TO ENSURE SUFFICIENT CHANNEL CAPACITY.
5. EROSION CONTROL BLANKET LINING SHALL BE AS MANUFACTURED BY NORTH AMERICAN GREEN, AS SPECIFIED IN THE TABLE ABOVE WITH A MINIMUM ROLL WIDTH OF 8 FEET.

STANDARD CONSTRUCTION DETAIL #6-1
VEGETATED CHANNEL
N.T.S.

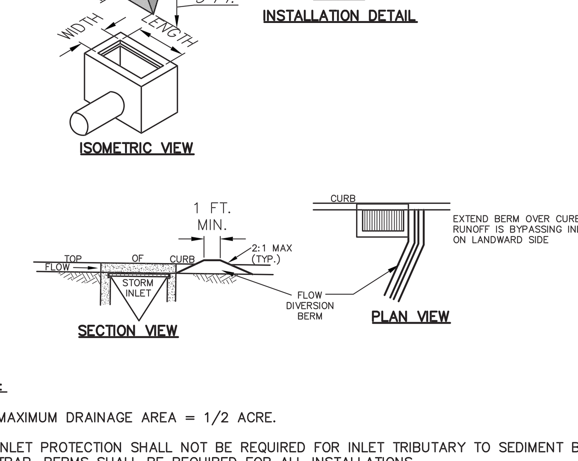

NOTES:

- MAXIMUM DRAINAGE AREA = 1/2 ACRE.
- INLET PROTECTION SHALL NOT BE REQUIRED FOR INLET TRIBUTARY TO SEDIMENT BASIN OR TRAP. BERMS SHALL BE REQUIRED FOR ALL INSTALLATIONS.
- ROLLED EARTHEN BERM SHALL BE MAINTAINED UNTIL ROADWAY IS STONED. ROAD SUBBASE BERM SHALL BE MAINTAINED UNTIL ROADWAY IS PAVED. FOUR INCH MINIMUM HEIGHT ASPHALT BERM SHALL BE MAINTAINED UNTIL ROADWAY SURFACE RECEIVES FINAL WEARING COURSE.
- AT A MINIMUM, THE FABRIC SHALL HAVE A MINIMUM GRAB TENSILE STRENGTH OF 120 LBS, A MINIMUM BURST STRENGTH OF 200 PSI, AND A MINIMUM TRAPEZOIDAL TEAR STRENGTH OF 50 LBS. FILTER BAGS SHALL BE CAPABLE OF TRAPPING ALL PARTICLES NOT PASSING A NO. 40 SIEVE.
- INLET FILTER BAGS SHALL BE INSPECTED ON A WEEKLY BASIS AND AFTER EACH RUNOFF EVENT. BAGS SHALL BE EMPTIED AND RINSED OR REPLACED WHEN HALF FULL OR WHEN FLOW CAPACITY HAS BEEN REDUCED SO AS TO CAUSE FLOODING OR BYPASSING OF THE INLET. DAMAGED OR CLOGGED BAGS SHALL BE REPLACED. A SUPPLY SHALL BE MAINTAINED ON SITE FOR REPLACEMENT OF BAGS. ALL NEEDED REPAIRS SHALL BE INITIATED IMMEDIATELY AFTER THE INSPECTION. DISPOSE OF ACCUMULATED SEDIMENT AS WELL AS ALL USED BAGS ACCORDING TO THE PLAN NOTES.
- DO NOT USE ON MAJOR PAVED ROADWAYS WHERE PONDING MAY CAUSE TRAFFIC HAZARDS.

STANDARD CONSTRUCTION DETAIL #4-15
FILTER BAG INLET PROTECTION – TYPE C INLET
N.T.S.

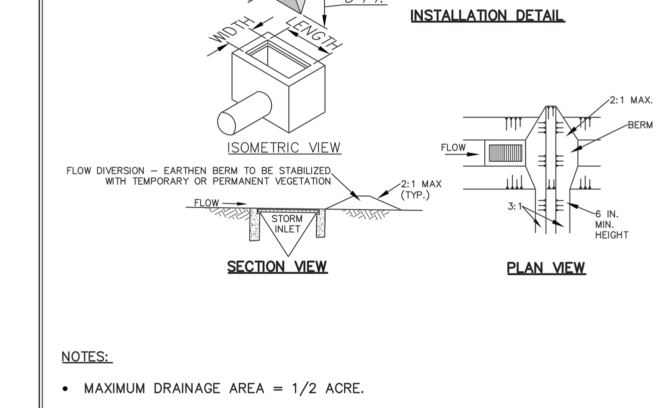

NOTES:

- MAXIMUM DRAINAGE AREA = 1/2 ACRE.
- INLET PROTECTION SHALL NOT BE REQUIRED FOR INLET TRIBUTARY TO SEDIMENT BASIN OR TRAP. BERMS SHALL BE REQUIRED FOR ALL INSTALLATIONS.
- ROLLED EARTHEN BERM IN ROADWAY SHALL BE MAINTAINED UNTIL ROADWAY IS STONED. ROAD SUBBASE BERM ON ROADWAY SHALL BE MAINTAINED UNTIL ROADWAY IS PAVED. EARTHEN BERM IN CHANNEL SHALL BE MAINTAINED UNTIL PERMANENT STABILIZATION IS COMPLETED OR REMAIN PERMANENTLY.
- AT A MINIMUM, THE FABRIC SHALL HAVE A MINIMUM GRAB TENSILE STRENGTH OF 120 LBS., A MINIMUM BURST STRENGTH OF 200 PSI, AND A MINIMUM TRAPEZOIDAL TEAR STRENGTH OF 50 LBS. FILTER BAGS SHALL BE CAPABLE OF TRAPPING ALL PARTICLES NOT PASSING A NO. 40 SIEVE.
- INLET FILTER BAGS SHALL BE INSPECTED ON A WEEKLY BASIS AND AFTER EACH RUNOFF EVENT. BAGS SHALL BE EMPTIED AND RINSED OR REPLACED WHEN HALF FULL OR WHEN FLOW CAPACITY HAS BEEN REDUCED SO AS TO CAUSE FLOODING OR BYPASSING OF THE INLET. DAMAGED OR CLOGGED BAGS SHALL BE REPLACED. A SUPPLY SHALL BE MAINTAINED ON SITE FOR REPLACEMENT OF BAGS. ALL NEEDED REPAIRS SHALL BE INITIATED IMMEDIATELY AFTER THE INSPECTION. DISPOSE ACCUMULATED SEDIMENT AS WELL AS ALL USED BAGS ACCORDING TO THE PLAN NOTES.
- DO NOT USE ON MAJOR PAVED ROADWAYS WHERE PONDING MAY CAUSE TRAFFIC HAZARDS.

STANDARD CONSTRUCTION DETAIL #4-16
FILTER BAG INLET PROTECTION – TYPE M INLET
N.T.S.

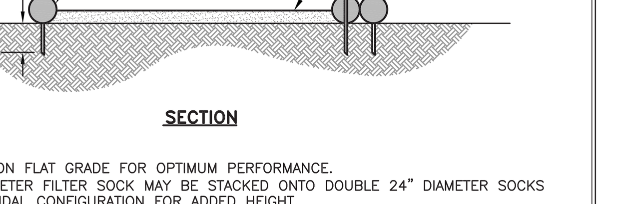

SECTION

NOTES:
1. INSTALL ON FLAT GRADE FOR OPTIMUM PERFORMANCE.
2. 18" DIAMETER FILTER SOCK MAY BE STACKED ONTO DOUBLE 24" DIAMETER SOCKS IN PYRAMIDAL CONFIGURATION FOR ADDED HEIGHT.

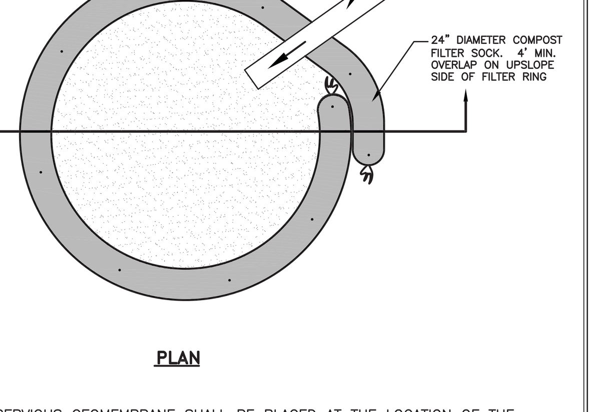

PLAN

A SUITABLE IMPERVIOUS GEOMEMBRANE SHALL BE PLACED AT THE LOCATION OF THE WASHOUT PRIOR TO INSTALLING THE SOCKS. (ADAPTED FROM "FILTREXX")

COMPOST FILTER SOCK
CONCRETE WASHOUT AREA DETAIL
N.T.S.

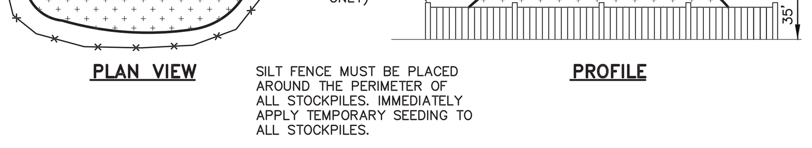

SILT FENCE MUST BE PLACED AROUND THE PERIMETER OF ALL STOCKPILES. IMMEDIATELY APPLY TEMPORARY SEEDING TO ALL STOCKPILES.

TOPSOIL STOCKPILE AREA DETAIL
N.T.S.

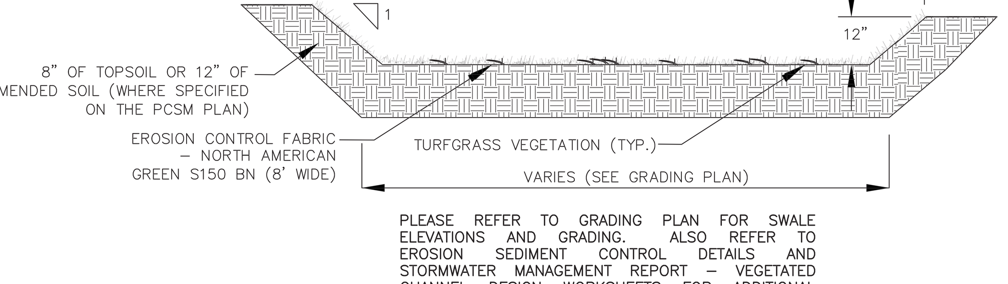

PLEASE REFER TO GRADING PLAN FOR SWALE ELEVATIONS AND GRADING. ALSO REFER TO EROSION SEDIMENT CONTROL DETAILS AND STORMWATER MANAGEMENT REPORT – VEGETATED CHANNEL DESIGN WORKSHEETS FOR ADDITIONAL SWALE DIMENSIONS AND CALCULATIONS.

VEGETATED DRAINAGE SWALE
N.T.S.

NOTE: REFER TO PCSM DETAILS PLAN FOR PROTECTION REQUIREMENTS FOR INFILTRATION/SEEPAGE BASIN CLEANOUT AND SURFACE COLLECTION STRUCTURES WITH SLOTTED GRATES.

ORIGINAL PLANS BEAR A REGISTRATION SEAL IN RED INK.

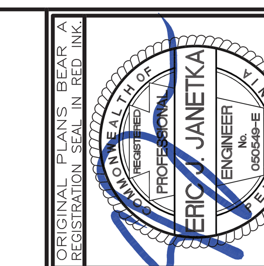

KELLY & CLOSE ENGINEERS
CONSULTING ENGINEERS & SURVEYORS
The Summit at Brandywine
1786 Wilmington Pike/Suite 300
Glen Mills, Pennsylvania 19342
610.358.9363 fax 610.358.9376

REV.	DATE	DESCRIPTION	BY
3	2/8/2019	REVISE PLAN PER TOWNSHIP CONSULTANT REVIEWS, NPDES PERMIT REVIEW	E.J.J.
2	10/5/2018	REVISED GRADING; REVISED SANITARY SEWER DESIGN; REVISED SWM	E.J.J.
1	9/10/2014	REVISED PER TWP 8-11-14 AND 8-18-14 REVIEW LETTERS	E.J.J.

date:	7/21/2014
scale:	AS NOTED
drawn by:	M.J.B.
checked by:	E.J.J.
dwg. name:	F-Dtls-EnS.dwg
project no.:	N/A

SHIRTZ FARM
110 SPROUL ROAD
EAST WHITELAND TOWNSHIP
CHESTER COUNTY, PENNSYLVANIA

EROSION AND SEDIMENTATION CONROL DETAILS

This document and all information and work product represented by and contained herein, is the sole and exclusive property of James C. Kelly & Associates, Inc., t/a Kelly & Close Engineers. The information contained herein is licensed only for limited use by the intended recipient, and no license, permission or authority is extended, directly or implied, to any party without express written permission of James C. Kelly & Associates, Inc.

Copyright, 2015, James C. Kelly & Associates, Inc. All rights reserved

SHEET 19 of 24

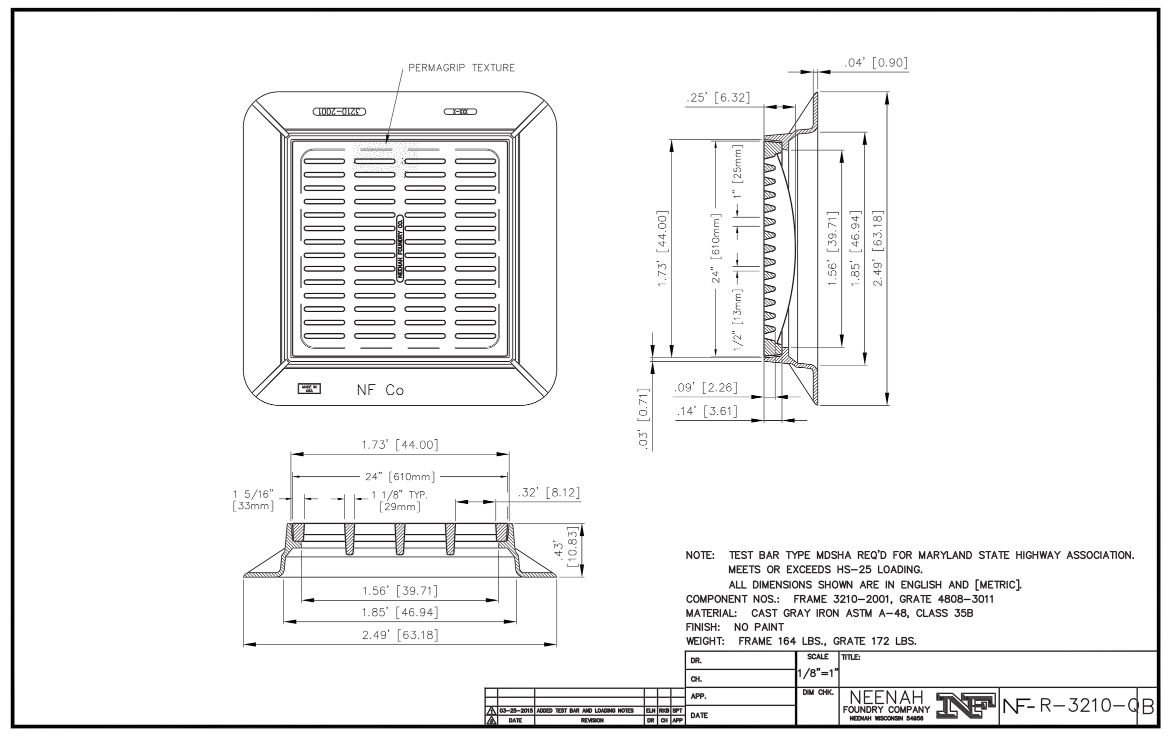

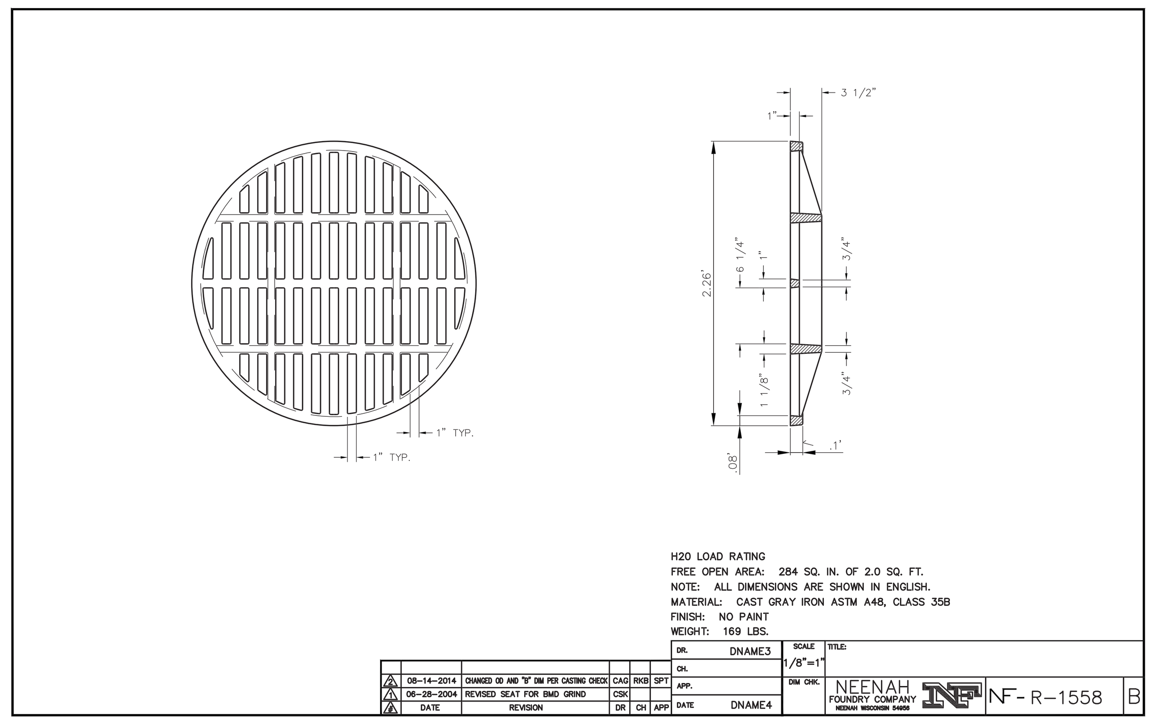

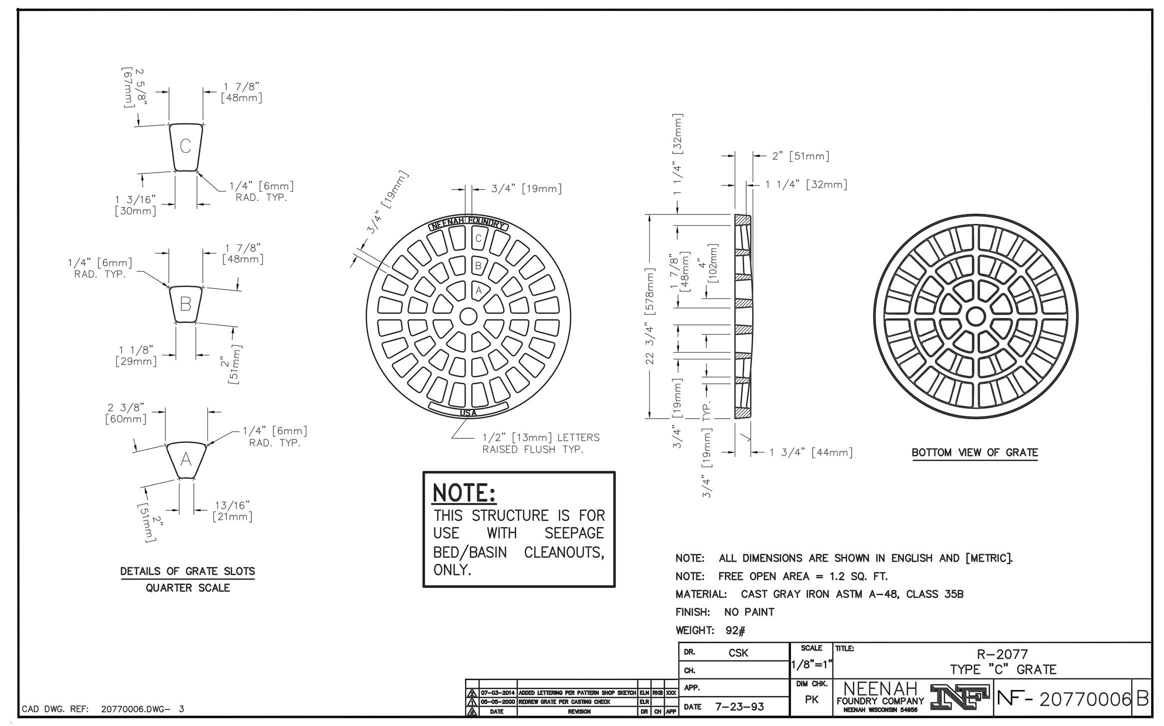

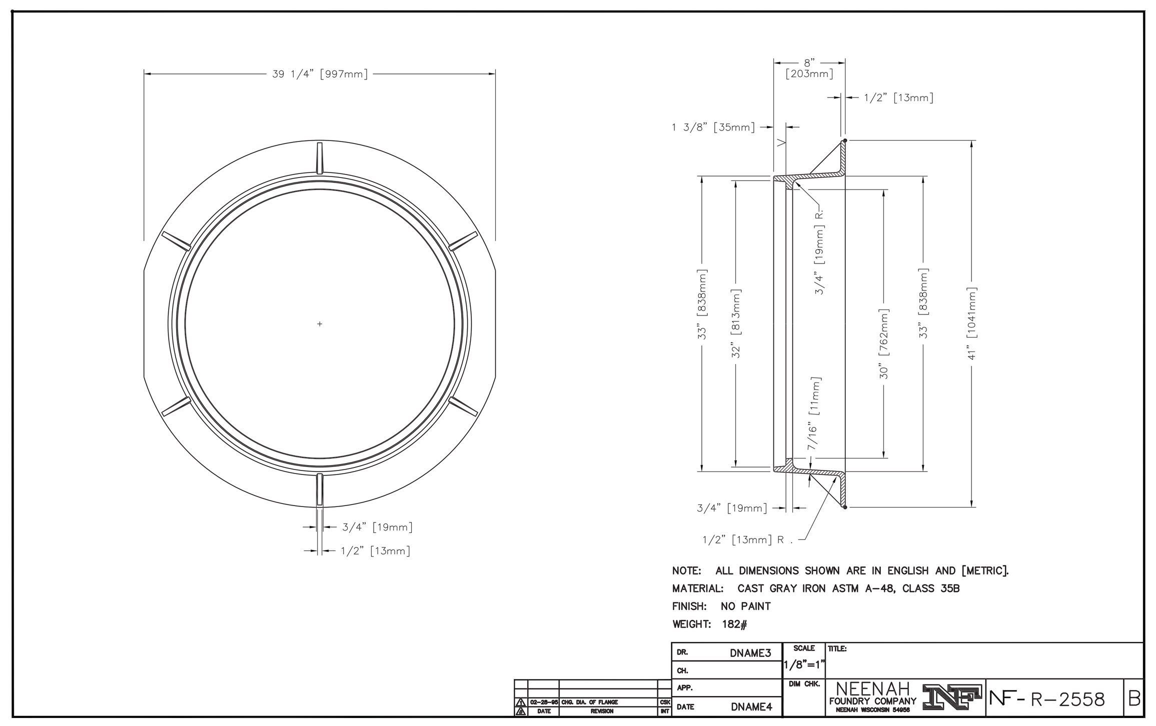

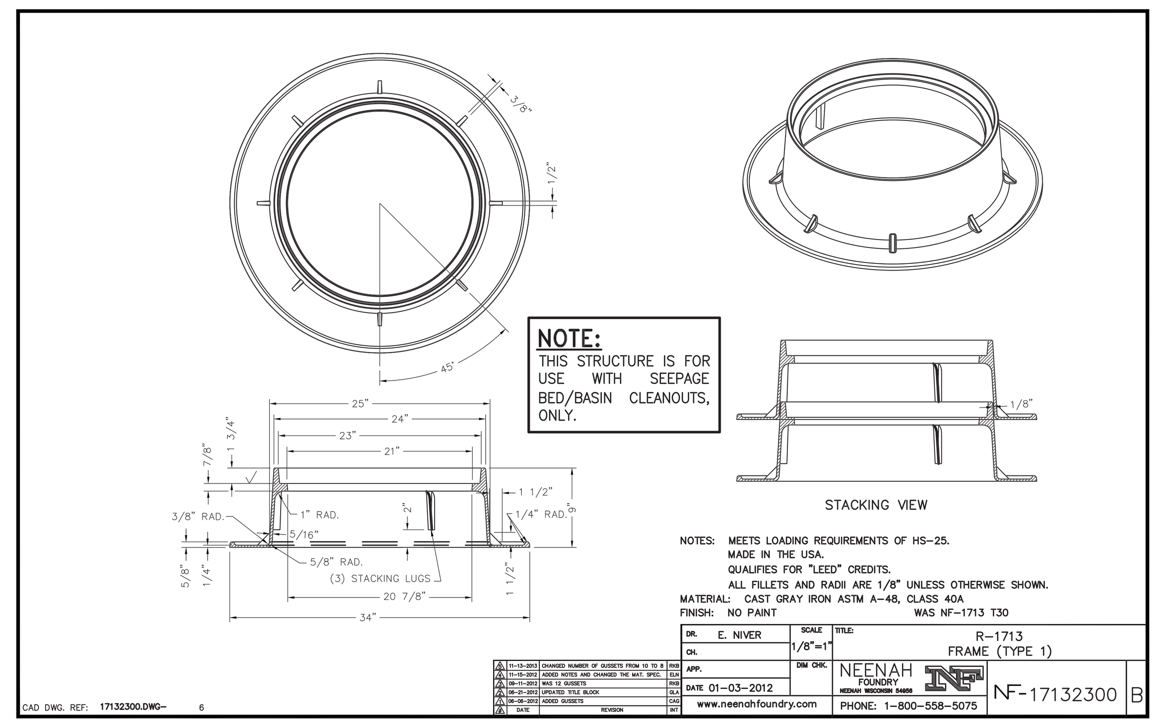

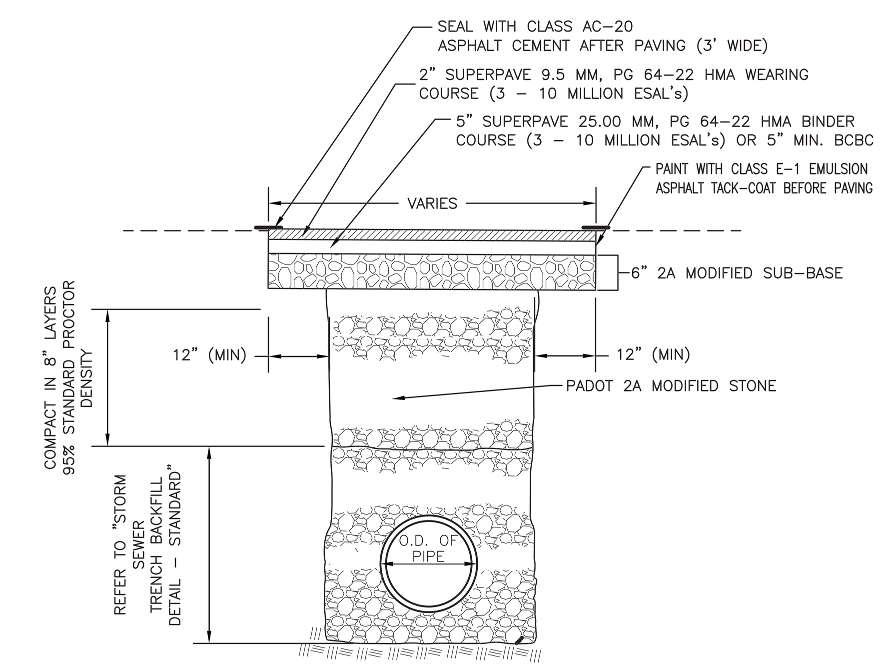

NOTES:

1. USE THIS DETAIL ONLY FOR UTILITY INSTALLATION WITHIN TOWNSHIP OWNED PAVED CARTWAY.
2. ALL STREET ROADWAY PAVEMENTS SHALL BE CUT BY A MECHANICAL SAW OR PAVING CUTTER ON A STRAIGHT LINE TO THE FULL DEPTH OF EXISTING PAVING.
3. ANY ITEMS (I.E., CURB, PAVED SURFACES OUTSIDE THE LIMIT OF WORK, ETC.) DAMAGED AS A RESULT OF THE CONTRACTOR'S OPERATION SHALL BE REPLACED IN KIND AT THE CONTRACTOR'S EXPENSE.
4. THE CONTRACTOR SHALL BE RESPONSIBLE FOR THE MAINTENANCE OF TEMPORARY PAVEMENT UNTIL IT IS REPLACED WITH PERMANENT PAVEMENT. (REFER TO "UTILITY TRENCH RESTORATION DETAIL - TEMPORARY PAVING")
5. BITUMINOUS MATERIAL FOR BASE AND SURFACE COURSES OR PERMANENT PAVEMENT REPLACEMENT SHALL NOT BE PLACED WHEN THE AIR TEMPERATURE IS 40° F OR LOWER; NOR WHEN THE TEMPERATURE OF THE PAVEMENT, BASE, OR BINDER ON WHICH IT IS TO BE PLACED IS 40° F OR LOWER.
6. IN ADDITION TO THIS RESTORATION DETAIL, CONTRACTOR SHALL ADHERE TO THE EAST WHITELAND TOWNSHIP RESTORATION STANDARDS.

UTILITY TRENCH RESTORATION DETAIL

N.T.S.

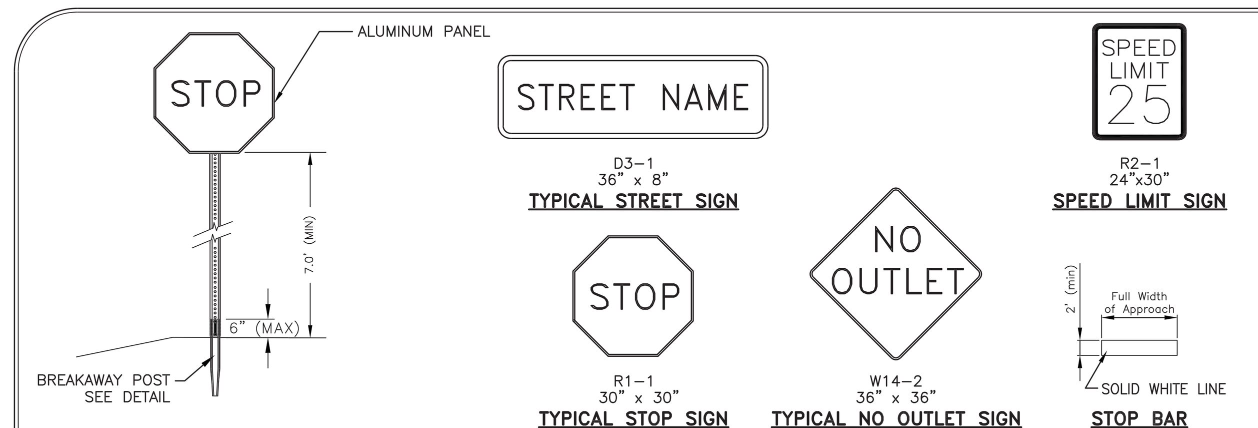

NOTE:
1) SIGNS SHALL BE INSTALLED IN ACCORDANCE WITH ALL PADOT SPECIFICATIONS.
2) SIGN SIZES, COLORS, MATERIALS AND MOUNTING HEIGHT PER PENNDOT PUB. 236 SPECS.
3) ALL SIGNS SHALL BE BREAKAWAY TYPE INSTALLATIONS IN ACCORDANCE WITH CURRENT PENNDOT SPECIFICATIONS.
4) ALL PARKING SIGNS, WITH THE EXCEPTION OF "PARKING ONLY IN MARKED SPACES" SHALL BE MOUNTED PARALLEL TO THE CURBLINE IN FRONT OF THE SIGN. THE "PARKING ONLY IN MARKED SPACES' SIGNS SHALL BE MOUNTED AT NINETY (90°) TO THE CURBLINE AND FACING THE ONCOMING TRAFFIC LANE.
5) STREET SIGN SHALL BE MOUNTED ON POST CONFORMING TO PENNDOT PUB. 236 REQUIREMENTS AND SECURED TO THE GROUND IN A CONCRETE FOOTING, 15" IN DIAMETER, 24" DEEP, WITH THE TOP OF THE FOOTING 6" BELOW FINAL GRADE. ALL OTHER SIGNS SHALL BE MOUNTED ON BREAKAWAY POSTS.

TRAFFIC, STRIPING & STREET SIGNS DETAIL

N.T.S.

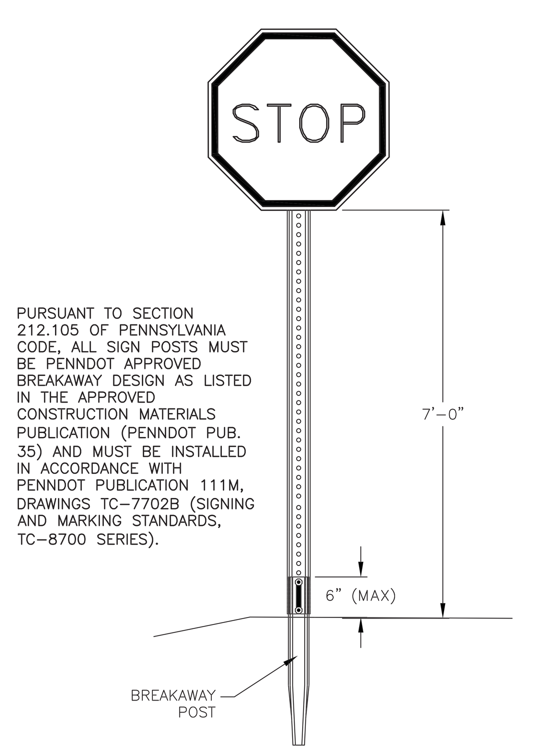

PURSUANT TO SECTION 212.105 OF PENNSYLVANIA CODE, ALL SIGN POSTS MUST BE PENNDOT APPROVED BREAKAWAY DESIGN AS LISTED IN THE APPROVED CONSTRUCTION MATERIALS PUBLICATION (PENNDOT PUB. 35) AND MUST BE INSTALLED IN ACCORDANCE WITH PENNDOT PUBLICATION 111M, DRAWINGS TC-7702B (SIGNING AND MARKING STANDARDS, TC-8700 SERIES).

BREAKAWAY POST DETAIL

N.T.S.

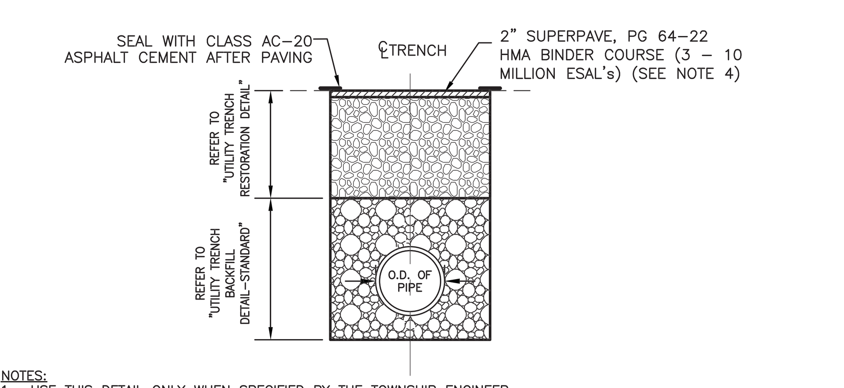

NOTES:
1. USE THIS DETAIL ONLY WHEN SPECIFIED BY THE TOWNSHIP ENGINEER.
2. TEMPORARY PAVING SHALL BE MAINTAINED FOR A MINIMUM OF 30 DAYS AND A MAXIMUM OF 90 DAYS PRIOR TO PLACING PERMANENT PAVING RESTORATION.
3. AREAS OF TEMPORARY PAVING THAT BECOME RUTTED, SPALLED OR DAMAGED SHALL BE REPAIRED IMMEDIATELY BY THE CONTRACTOR.
4. DO NOT USE "COLD PATCH".

UTILITY TRENCH RESTORATION DETAIL - TEMPORARY PAVING

N.T.S.

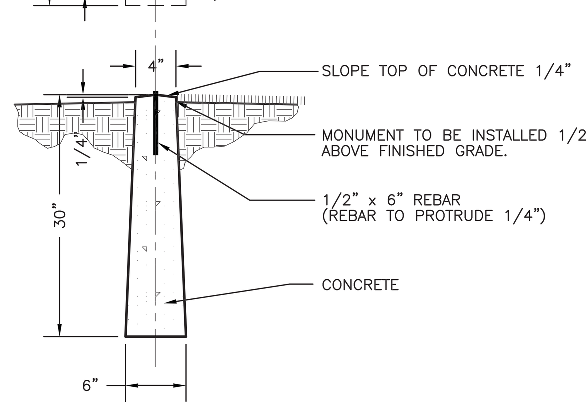

CONCRETE MONUMENT DETAIL

N.T.S.

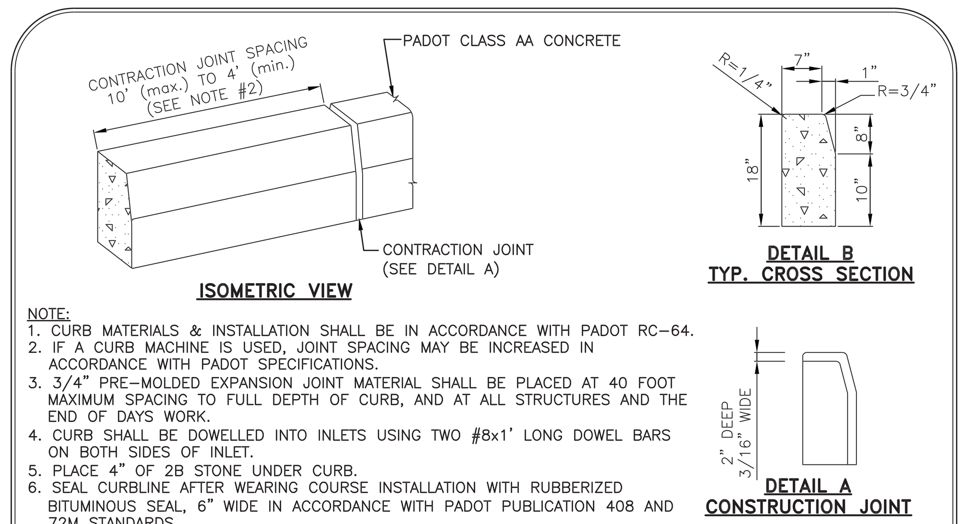

NOTE:
1. CURB MATERIALS & INSTALLATION SHALL BE IN ACCORDANCE WITH PADOT RC-64.
2. IF A CURB MACHINE IS USED, JOINT SPACING MAY BE INCREASED IN ACCORDANCE WITH PADOT SPECIFICATIONS.
3. 3/4" PRE-MOLDED EXPANSION JOINT MATERIAL SHALL BE PLACED AT 40 FOOT MAXIMUM SPACING TO FULL DEPTH OF CURB, AND AT ALL STRUCTURES AND THE END OF DAYS WORK.
4. CURB SHALL BE DOWELLED INTO INLETS USING TWO #8x1' LONG DOWEL BARS ON BOTH SIDES OF INLET.
5. PLACE 4" OF 2B STONE UNDER CURB.
6. SEAL CURBLINE AFTER WEARING COURSE INSTALLATION WITH RUBBERIZED BITUMINOUS SEAL, 6" WIDE IN ACCORDANCE WITH PADOT PUBLICATION 408 AND 72M STANDARDS.

PLAIN CEMENT CONCRETE CURB DETAIL

N.T.S.

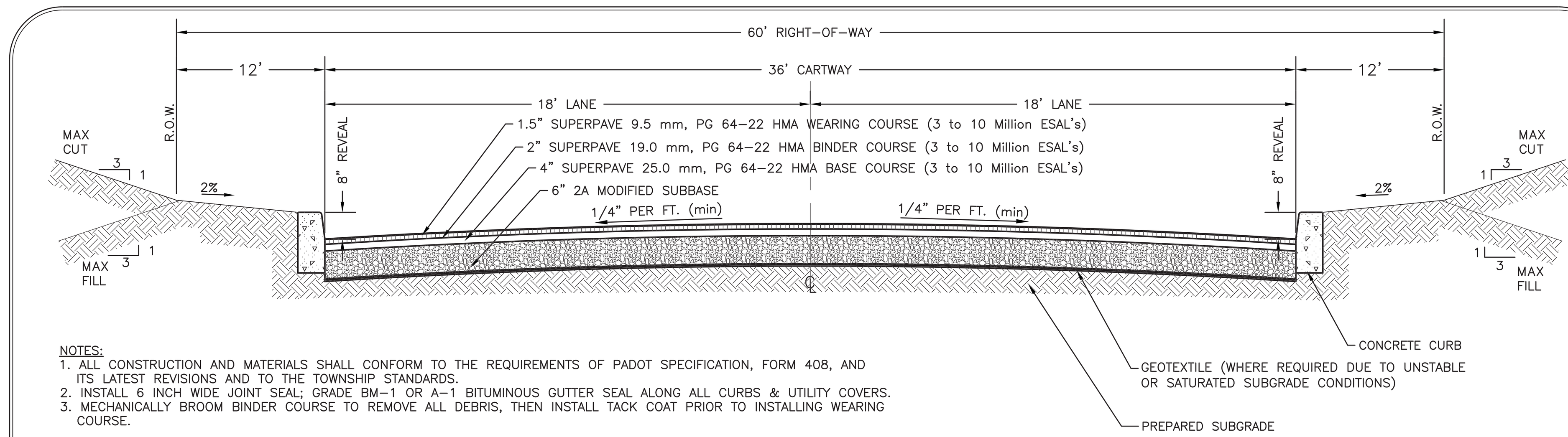

NOTES:
1. ALL CONSTRUCTION AND MATERIALS SHALL CONFORM TO THE REQUIREMENTS OF PADOT SPECIFICATION, FORM 408, AND ITS LATEST REVISIONS AND TO THE TOWNSHIP STANDARDS.
2. INSTALL 6 INCH WIDE JOINT SEAL; GRADE BM-1 OR A-1 BITUMINOUS GUTTER SEAL ALONG ALL CURBS & UTILITY COVERS.
3. MECHANICALLY BROOM BINDER COURSE TO REMOVE ALL DEBRIS, THEN INSTALL TACK COAT PRIOR TO INSTALLING WEARING COURSE.

TYPICAL ROAD CROSS-SECTION

N.T.S.

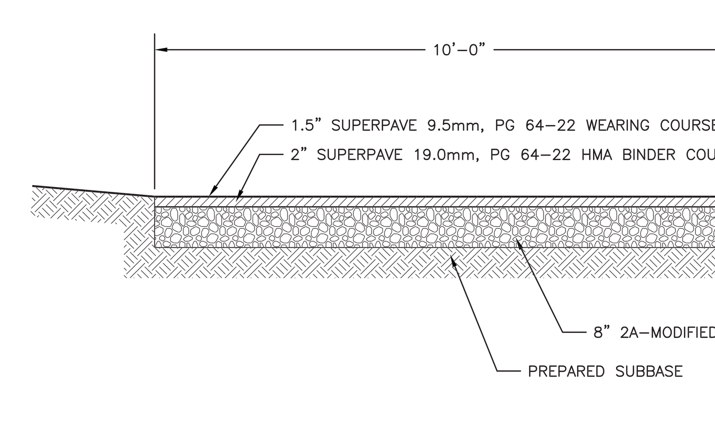

RESIDENTIAL DRIVEWAY PAVING DETAIL

N.T.S.

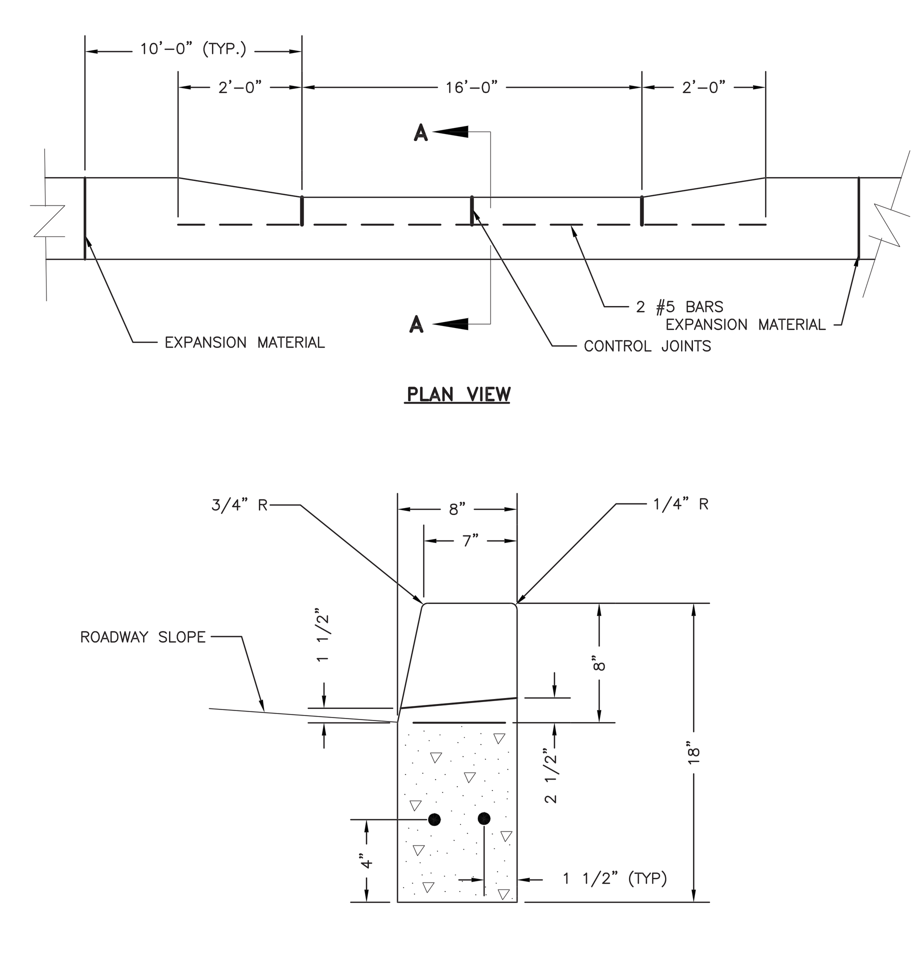

NOTE:
CURB MATERIALS AND INSTALLATION SHALL BE IN ACCORDANCE WITH PADOT RC-64.

DEPRESSED CURB DETAIL

N.T.S.

ORIGINAL PLANS BEAR A REGISTRATION SEAL IN RED INK.

COMMONWEALTH OF PENNSYLVANIA REGISTERED PROFESSIONAL ENGINEER ERIC J. JANETKA No. 050549-E

KELLY & CLOSE ENGINEERS
CONSULTING ENGINEERS & SURVEYORS
The Summit at Brandywine
1786 Wilmington Pike/Suite 300
Glen Mills, Pennsylvania 19342
610.358.9363 fax 610.358.9376

REV.	DATE	DESCRIPTION	BY
3	2/8/2019	REVISE PLAN PER TOWNSHIP CONSULTANT REVIEWS, NPDES PERMIT REVIEW	E.J.J.
2	10/5/2018	REVISED GRADING; REVISED SANITARY SEWER DESIGN; REVISED SWM	E.J.J.
1	9/10/2014	REVISED PER TWP 8-11-14 AND 8-18-14 REVIEW LETTERS	E.J.J.

date:	7/21/2014
scale:	AS NOTED
drawn by:	M.J.B.
checked by:	E.J.J.
dwg. name:	F-Dtls.dwg
project no.:	N/A

SHIRTZ FARM

110 SPROUL ROAD
EAST WHITELAND TOWNSHIP
CHESTER COUNTY, PENNSYLVANIA

CONSTRUCTION DETAILS (1 OF 2)

This document and all information and work product represented by and contained herein, is the sole and exclusive property of James C. Kelly & Associates, Inc., t/a Kelly & Close Engineers. The information contained herein is licensed only for limited use by the intended recipient, and no license, permission or authority is extended, directly or implied, to any party without express written permission of James C. Kelly & Associates, Inc.

Copyright, 2015, James C. Kelly & Associates, Inc. All rights reserved

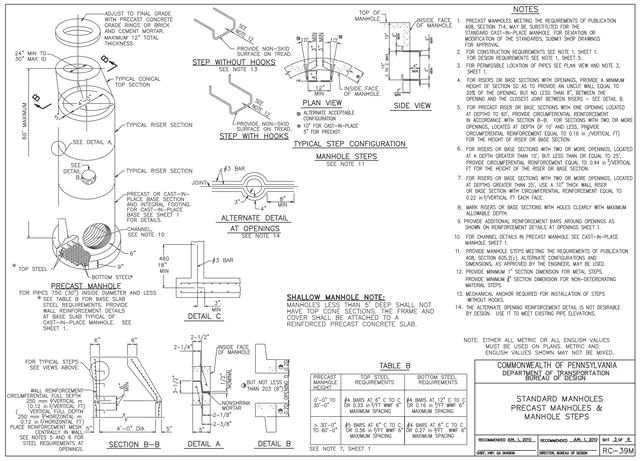

NOTES

1. PRECAST MANHOLES MEETING THE REQUIREMENTS OF PUBLICATION 408, SECTION 714, MAY BE SUBSTITUTED FOR THE STANDARD CAST-IN-PLACE MANHOLE. FOR DEVIATION OR MODIFICATION OF THE STANDARDS, SUBMIT SHOP DRAWINGS FOR APPROVAL.
2. FOR CONSTRUCTION REQUIREMENTS SEE NOTE 1, SHEET 1. FOR DESIGN REQUIREMENTS SEE NOTE 1, SHEET 3.
3. FOR PERMISSIBLE LOCATION OF PIPES SEE PLAN VIEW AND NOTE 3, SHEET 1.
4. FOR RISERS OR BASE SECTIONS WITH OPENINGS, PROVIDE A MINIMUM HEIGHT OF SECTION 30" AS TO PROVIDE AN UNCUT WALL EQUAL TO 20% OF THE OPENING, BUT NO LESS THAN 8", BETWEEN THE OPENING AND THE CLOSEST JOINT BETWEEN RISERS — SEE DETAIL B.
5. FOR PRECAST RISER OR BASE SECTIONS WITH ONE OPENING LOCATED AT DEPTHS TO 60", PROVIDE CIRCUMFERENTIAL REINFORCEMENT IN ACCORDANCE WITH SECTION B-B. FOR SECTIONS WITH TWO OR MORE OPENINGS, LOCATED AT DEPTH OF 10' AND LESS, PROVIDE CIRCUMFERENTIAL REINFORCEMENT EQUAL TO 0.16 in²/VERTICAL FT FOR THE HEIGHT OF RISER OR BASE SECTION.
6. FOR RISERS OR BASE SECTIONS WITH TWO OR MORE OPENINGS, LOCATED AT A DEPTH GREATER THAN 10', BUT LESS THAN OR EQUAL TO 25', PROVIDE CIRCUMFERENTIAL REINFORCEMENT EQUAL TO 0.44 in²/VERTICAL FT FOR THE HEIGHT OF THE RISER OR BASE SECTION.
7. FOR RISERS OR BASE SECTIONS WITH TWO OR MORE OPENINGS, LOCATED AT DEPTHS GREATER THAN 25', USE A 10" THICK WALL RISER OR BASE SECTION WITH CIRCUMFERENTIAL REINFORCEMENT EQUAL TO 0.22 in²/VERTICAL FT EACH FACE.
8. MARK RISERS OR BASE SECTIONS WITH HOLES CLEARLY WITH MAXIMUM ALLOWABLE DEPTH.
9. PROVIDE ADDITIONAL REINFORCEMENT BARS AROUND OPENINGS AS SHOWN ON REINFORCEMENT DETAILS AT OPENINGS SHEET 1.
10. FOR CHANNEL DETAILS IN PRECAST MANHOLE SEE CAST-IN-PLACE MANHOLE SHEET 1.
11. PROVIDE MANHOLE STEPS MEETING THE REQUIREMENTS OF PUBLICATION 408, SECTION 605.2(J). ALTERNATE CONFIGURATIONS AND DIMENSIONS, AS APPROVED BY THE ENGINEER, MAY BE USED.
12. PROVIDE MINIMUM 1" SECTION DIMENSION FOR METAL STEPS. PROVIDE MINIMUM 2" SECTION DIMENSION FOR NON-DETERIORATING MATERIAL STEPS.
13. MECHANICAL ANCHOR REQUIRED FOR INSTALLATION OF STEPS WITHOUT HOOKS.
14. THE ALTERNATE OPENING REINFORCEMENT DETAIL IS NOT DESIRABLE BY DESIGN. USE IT TO MEET EXISTING PIPE ELEVATIONS.

NOTE: EITHER ALL METRIC OR ALL ENGLISH VALUES MUST BE USED ON PLANS. METRIC AND ENGLISH VALUES SHOWN MAY NOT BE MIXED.

TABLE B

PRECAST MANHOLE HEIGHT	TOP STEEL REQUIREMENTS	BOTTOM STEEL REQUIREMENTS
0'-0" TO 30'-0"	#4 BARS AT 6" C. TO C. OR 0.33 in²/FT. MIN* & MAXIMUM SPACING	#4 BARS AT 12" C. TO C. OR 0.16 in²/FT. MIN* & MAXIMUM SPACING
> 30'-0" TO 60'-0"	#5 BARS AT 6" C. TO C. OR 0.56 in²/FT. MIN* & MAXIMUM SPACING	#4 BARS AT 6" C. TO C. OR 0.27 in²/FT. MIN* & MAXIMUM SPACING

SEE NOTE 7, SHEET 1

COMMONWEALTH OF PENNSYLVANIA
DEPARTMENT OF TRANSPORTATION
BUREAU OF DESIGN

STANDARD MANHOLES
PRECAST MANHOLES &
MANHOLE STEPS

RECOMMENDED JUN. 1, 2012 | RECOMMENDED APR. 1, 2013 | SHT 3 OF 5
CHIEF, PRC. DN DIVISION | DIRECTOR, BUREAU OF DESIGN | RC-39M

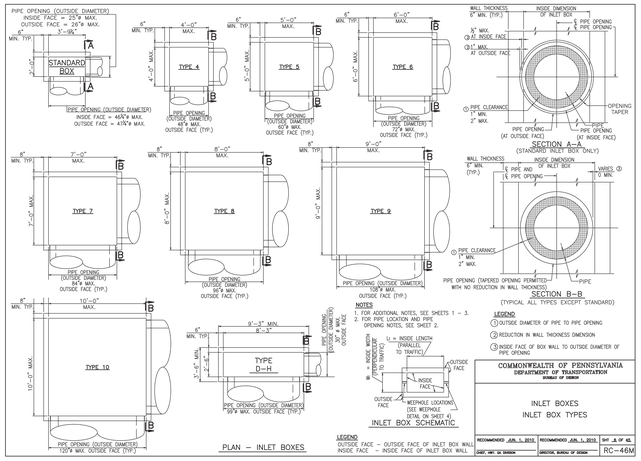

NOTES

1. FOR ADDITIONAL NOTES, SEE SHEETS 1 – 3.
2. FOR PIPE LOCATION AND PIPE OPENING NOTES, SEE SHEET 2.

LEGEND
OUTSIDE FACE – OUTSIDE FACE OF INLET BOX WALL
INSIDE FACE – INSIDE FACE OF INLET BOX WALL

LEGEND
① OUTSIDE DIAMETER OF PIPE TO PIPE OPENING
② REDUCTION IN WALL THICKNESS DIMENSION
③ INSIDE FACE OF BOX WALL TO OUTSIDE DIAMETER OF PIPE OPENING

COMMONWEALTH OF PENNSYLVANIA
DEPARTMENT OF TRANSPORTATION
BUREAU OF DESIGN

INLET BOXES
INLET BOX TYPES

RECOMMENDED JUN. 1, 2012 | RECOMMENDED JUN. 1, 2012 | SHT 4 OF 45
CHIEF, PRC. DN DIVISION | DIRECTOR, BUREAU OF DESIGN | RC-46M

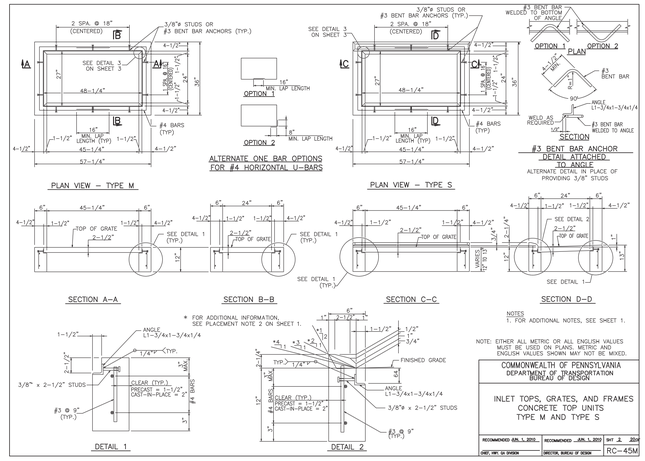

NOTES

1. FOR ADDITIONAL NOTES, SEE SHEET 1.

NOTE: EITHER ALL METRIC OR ALL ENGLISH VALUES MUST BE USED ON PLANS. METRIC AND ENGLISH VALUES SHOWN MAY NOT BE MIXED.

COMMONWEALTH OF PENNSYLVANIA
DEPARTMENT OF TRANSPORTATION
BUREAU OF DESIGN

INLET TOPS, GRATES, AND FRAMES
CONCRETE TOP UNITS
TYPE M AND TYPE S

RECOMMENDED APR. 1, 2010 | RECOMMENDED APR. 1, 2010 | SHT 2 OF 20
CHIEF, PRC. DN DIVISION | DIRECTOR, BUREAU OF DESIGN | RC-45M

NOTES

1. PROVIDE MANHOLE FRAMES AND COVERS MEETING THE REQUIREMENTS OF PUBLICATION 408, SECTION 605.2(b). DESIGN MANHOLE FRAME, COVER AND GRADE ADJUSTMENT RINGS FOR PA, 93 (H20) LOADING. IF MANHOLES ARE NOT IN OR ADJACENT TO ROADWAY, DESIGN FOR ALL POSSIBLE LIVE LOADINGS. SEE NOTE 1, SHEET 3 FOR DESIGN.
2. PROVIDE MANHOLE FRAMES, COVERS AND GRADE ADJUSTMENT RISERS SUPPLIED BY A MANUFACTURER AS LISTED IN BULLETIN 15. FOR DEVIATION OR MODIFICATION TO THE STANDARDS, SUBMIT SHOP DRAWINGS FOR APPROVAL.
3. PROVIDE A GASKET SEALING SYSTEM (DOVETAIL GROOVE AND CONTINUOUS GASKET, AS INDICATED IN DETAIL A, TO PREVENT INFLOW THROUGH THE BEARING SURFACES, OF SURFACE RUNOFF WATER IN THE SYSTEM. GASKET SHALL BE PREFORMED ROUND CORD, 0.75 DIAMETER, SOLID RUBBER, NON-PREFORMED RUBBER CORD, 0.75 DIAMETER GLUED IN PLACE. PROVIDE TWO (2) LIFT HOLES, AT 180° TO FACILITATE COVER REMOVAL FOR SELF-SEALING MANHOLE COVER.
4. PROVIDE ONE LIFT HOLE TO FACILITATE COVER REMOVAL FOR NON-SEALING MANHOLE COVER.
5. FRAME AND GRATE OR ADJUSTMENT RISER TO HAVE A MINIMUM BEARING SURFACE OF 2" ON TOP OF ADJUSTMENT RISER.
6. LOCATE TOP OF FRAME OR ADJUSTMENT RISER 3 (") BELOW THE TOP OF ROADWAY SURFACE.
7. PROVIDE GRADE ADJUSTMENT RISERS MEETING THE REQUIREMENTS OF PUBLICATION 408, SECTION 605, AND AS MODIFIED HEREIN:
   A. CUSTOM FABRICATE EACH ADJUSTMENT RISER FROM MEASUREMENTS PROVIDED WITH EACH ORDER.
   B. MANUFACTURE BAR STOCK AND RECEIVER CUP FROM U.S. MADE CARBON STEEL MEETING OR EXCEEDING THE MINIMUM REQUIREMENTS OF ASTM A-36M.
   C. REQUIRE FULL CIRCUMFERENTIAL WELDS ON BOTH TOP AND BOTTOM RINGS. MAKE THE INNER WELD A BEVEL GROOVE WELD (FLUSH FINISH) FOR PROPER SEATING OF MANHOLE LID AND MAKE THE OUTER WELD A FILLET WELD.
   D. MAKE THE MINIMUM WIDTH OF BOTTOM AND TOP BAR STOCK 1" AND THE THICKNESS 3/8".
   E. TAP THE BOTTOM BAR STOCK FOR MULTI-PIECE ADJUSTMENT RISER FOR M14 ADJUSTMENT BOLT.
   F. REINFORCE THE ADJUSTMENT RISER ADEQUATELY TO PREVENT BENDING.
   G. PROVIDE AN ADJUSTMENT RISER WHICH IS FLUSH WITH COVER AND DOES NOT ALLOW EXCESSIVE MOVEMENT.
   H. PROVIDE A RECEIVER CUP AND BAR WHICH CONFORMS TO THE SHAPE OF THE ORIGINAL FRAME.
8. ATTACH FRAME AND/OR PRECAST CONCRETE GRADE RINGS RIGIDLY TO TOP OF MANHOLE, USE 5-1/2" THREADED STUDS WITH HEX HEAD NUTS AND WASHERS, INSERTED THROUGH AT 5/8" DIA HOLES THROUGH FRAME AND/OR RINGS. SPACE HOLES AT 120° AND 2" FROM OUTSIDE EDGE OF FRAME. EMBED STUDS 4" MINIMUM INTO MANHOLE. GROUT STUDS INTO MANHOLE.
9. SET THE BASE OF THE FRAME AND/OR PRECAST CONCRETE GRADE RINGS IN A BED OF CEMENT MORTAR.

NOTE: EITHER ALL METRIC OR ALL ENGLISH VALUES MUST BE USED ON PLANS. METRIC AND ENGLISH VALUES SHOWN MAY NOT BE MIXED.

COMMONWEALTH OF PENNSYLVANIA
DEPARTMENT OF TRANSPORTATION
BUREAU OF DESIGN

STANDARD MANHOLES
COVERS, FRAMES AND
ADJUSTMENT RISERS

RECOMMENDED APR. 1, 2010 | RECOMMENDED APR. 1, 2010 | SHT 5 OF 5
CHIEF, PRC. DN DIVISION | DIRECTOR, BUREAU OF DESIGN | RC-39M

NOTES

1. FOR ADDITIONAL NOTES, SEE SHEETS 1 – 3.
2. STANDARD INLET BOXES SHOWN, PROVIDE TOP SLABS FOR OTHER INLET BOX TYPES.
3. SEE RC-45M FOR DETAILS FOR THE CONCRETE TOP UNITS, FRAMES, AND GRATES.
4. PROVIDE GRADE ADJUSTMENT RINGS WHEN REQUIRED. SEE RC-45M FOR DETAILS.

NOTE: COST OF NO. 2A COARSE AGGREGATE IS INCIDENTAL TO THE INLET BOX.

INLET BOX SUBBASE PREPARATION DETAIL
(SEE FIELD CONSTRUCTION NOTES ON SHEET 1)

NOTE: COST OF NO. 57 COARSE AGGREGATE AND GEOTEXTILE IS INCIDENTAL TO THE INLET BOX.

WEEPHOLE DETAIL
(SEE GENERAL NOTE 15 ON SHEET 1)

1/2 CU. YD. OF NO. 57 COARSE AGGREGATE AT EACH WEEPHOLE
PLUS 40% SWELL
IN GEOTEXTILE, CLASS 1 PUB 408, SECTION 1001.3 (C) & (D))

COMMONWEALTH OF PENNSYLVANIA
DEPARTMENT OF TRANSPORTATION
BUREAU OF DESIGN

INLET BOXES
INLET ASSEMBLIES – 1

RECOMMENDED JUN. 1, 2012 | RECOMMENDED JUN. 1, 2012 | SHT 6 OF 45
CHIEF, PRC. DN DIVISION | DIRECTOR, BUREAU OF DESIGN | RC-46M

NOTES

1. FOR ADDITIONAL NOTES, SEE SHEET 1.
2. A MAXIMUM OF TWO HOLES ARE PERMITTED IN THE PLATE TO POSITION AND HOLD THE PLATE IN PLACE DURING FABRICATION. HOLES ARE NOT PERMITTED TO BE GREATER THAN 1/4" DIAMETER.
3. FABRICATOR TO DETERMINE NUMBER OF BARS REQUIRED TO MATCH SHAPE INDICATED. PROVIDE ONE, TWO, OR THREE BARS AS REQUIRED.
4. BEND OUTSIDE STIRRUP TO ACCOMMODATE DOWEL BARS AND STILL MAINTAIN CLEARANCE REQUIREMENTS.

NOTE: EITHER ALL METRIC OR ALL ENGLISH VALUES MUST BE USED ON PLANS. METRIC AND ENGLISH VALUES SHOWN MAY NOT BE MIXED.

COMMONWEALTH OF PENNSYLVANIA
DEPARTMENT OF TRANSPORTATION
BUREAU OF DESIGN

INLET TOPS, GRATES, AND FRAMES
CONCRETE TOP UNITS
TYPE C

RECOMMENDED APR. 1, 2010 | RECOMMENDED APR. 1, 2010 | SHT 3 OF 20
CHIEF, PRC. DN DIVISION | DIRECTOR, BUREAU OF DESIGN | RC-45M

NOTES:

1. FOR EXISTING NON-PAVED AREAS, SUITABLE EXCAVATED MATERIAL SHALL BE CLEAN, DRY NON-FROZEN EARTH WITH A MAXIMUM STONE SIZE OF 6 INCHES. FOR PAVED AREAS, REFER TO APPROPRIATE RESTORATION DETAIL FOR REQUIRED BACKFILL TO GRADE.
2. FOR EXISTING NON-PAVED AREAS, REFER TO SEED OR HYDROSEED SPECIFICATION. FOR PAVED AREAS, REFER TO APPROPRIATE RESTORATION DETAIL, IN PENNDOT OR MUNICIPAL ROAD.
3. FOR TRENCHES EXCEEDING 4 FEET IN HEIGHT, UPPER SECTION OF TRENCH SHALL BE CUT BACK A MINIMUM OF 1-1/2 HORIZONTAL TO 1 VERTICAL. IN LIEU OF A CUT BACK, PROPER SHORING MAY BE USED WHEN APPROVED BY THE ENGINEER. TRENCH RESTORATION SHALL BE IN ACCORDANCE WITH OSHA REGULATIONS. WHERE OSHA REGULATIONS ARE MORE STRINGENT THAN THIS DETAIL, OSHA REGULATIONS SHALL TAKE PRECEDENCE.
4. USE THIS DETAIL FOR EXCAVATION IN ROCK AND UNSUITABLE SUBGRADE. WHERE UNSUITABLE SUBGRADE IS ENCOUNTERED, INSTALL A 12" MINIMUM LAYER OF PENNDOT #4 STONE BALLAST TO STABILIZE SUBGRADE, PRIOR TO INSTALLING PIPE BEDDING.
5. USE THIS DETAIL ALSO FOR INSTALLING UTILITIES WITHIN NEW ROADS AND PARKING LOTS. REFER TO TYPICAL PAVING SECTIONS FOR SURFACE CONSTRUCTION.
6. FOR WATERMAIN AND OTHER UTILITIES, REFER TO OWNERS' STANDARDS AND SPECIFICATIONS FOR TRENCH BACKFILL.

STORM SEWER TRENCH BACKFILL DETAIL – STANDARD
N.T.S.

k-ut-tren-back-std.dwg

7001PL1 Drainage Marker

Product Number
00700160

Design Features
-Materials
Gray Iron (CL35B)
-Design Load
n/a
-Open Area
n/a
-Coating
Dipped
- – Designates Machined Surface

Certification
- ASTM A48
-
-Country of Origin USA

NOTES:
1. PROVIDE TROUT LOGO PLATE AS MANUFACTURED BY EJ GROUP, INC. (FORMERLY EAST JORDAN IRON WORKS, INC.) PRODUCT@00700160 OR APPROVED EQUAL.
2. TROUT LOGO PLATE SHALL BE AFFIXED TO ALL STORM SEWER INLETS.

Drawing Revision
03272003 Designer: JHS
05/06/2014 Revised By MAH

Disclaimer
- Product and part dimensions (tolerances) and drawings provided for your guidance. We reserve the right to modify specifications without notification.

-CONFIDENTIAL: This drawing is the property of EJ GROUP, Inc. and embodies confidential information, proprietary ideas and designs. Acceptance and/or possession of this drawing implies that it is the property of EJ GROUP, Inc. Copyright © 2012 EJ GROUP, Inc. All rights reserved.

Contact
800 626 4653
ejgroup.com

TROUT LOGO PLATE

NOTES

1. FOR ADDITIONAL NOTES, SEE SHEET 1.
2. FOR STRUCTURAL STEEL GRATE NOTES, SEE SHEET 7.

NOTE: EITHER ALL METRIC OR ALL ENGLISH VALUES MUST BE USED ON PLANS. METRIC AND ENGLISH VALUES SHOWN MAY NOT BE MIXED.

COMMONWEALTH OF PENNSYLVANIA
DEPARTMENT OF TRANSPORTATION
BUREAU OF DESIGN

INLET TOPS, GRATES, AND FRAMES
STRUCTURAL STEEL GRATE
BICYCLE SAFE

RECOMMENDED APR. 1, 2013 | RECOMMENDED APR. 1, 2013 | SHT 3 OF 20
CHIEF, PRC. DN DIVISION | DIRECTOR, BUREAU OF DESIGN | RC-45M

SUBMITTALS APPROVAL NOTE:
CONTRACTOR SHALL SUBMIT ALL REQUIRED SHOP DRAWINGS AND DOCUMENTATION FOR THE PROPOSED STORM, SANITARY, AND STREET MATERIALS TO BOTH THE DESIGN ENGINEER AND THE MUNICIPAL ENGINEER AND RECEIVE APPROVAL FROM BOTH PRIOR TO COMMENCEMENT OF ANY CONSTRUCTION RELATED TO SAID ITEMS.

DOCUMENTS PREPARED UNDER THE SUPERVISION OF
ERIC J. JANETKA
ENGINEER
No. 060000
COMMONWEALTH OF PENNSYLVANIA

K&C
KELLY & CLOSE ENGINEERS
CONSULTING ENGINEERS & SURVEYORS
The Summit at Brandywine
1 Summit Square, Suite 200
Glen Mills, Pennsylvania 19342
610.358.9363 fax 610.358.9372

BY	DESCRIPTION	DATE	REV
E.J.J.	REVIEW	7/8/2014	3
E.J.J.	REVISED PER TWP. 8-11-14 AND 8-18-14 REVIEW LETTERS	10/25/2014	2
E.J.J.	REVISED SANITARY SEWER DESIGN, REVISED SWM	9/10/2014	1

date: 7/21/2014
scale: AS NOTED
drawn by: M.J.B.
checked by: E.J.J.
dwg. name: F-Dtls.dwg
project no.: N/A

SHIRTZ FARM
110 SPROUL ROAD
EAST WHITELAND TOWNSHIP
CHESTER COUNTY, PENNSYLVANIA

CONSTRUCTION DETAILS (2 OF 2)

This document and all information and work product represented by and contained herein, is the sole and exclusive property of James C. Kelly & Associates, Inc., t/a Kelly & Close Engineers. The information contained herein is not to be used by any person, firm or corporation for any purpose whatsoever without the written authority of James C. Kelly & Associates, Inc., t/a Kelly & Close Engineers. Any use or publication without such authority is expressly prohibited, and will be subject to enforcement to the fullest extent of the law.
Copyright, 2015, James C. Kelly & Associates, Inc.
All rights reserved

SHEET 21 of 24