SIMPSON Strong-Tie®

Deck Framing Connection Guide

RECOMMENDATIONS FOR THE CONSTRUCTION OF CODE-COMPLIANT DECKS

800-999-5099 | www.strongtie.com

Contents

Introduction – Improperly Built Decks Can Be Dangerous 3
Critical Deck Connections 4
Existing Decks: Retrofit or Replace 5
Selecting Connectors and Fasteners: Corrosion Issues 6
Stainless-Steel Connectors and Fasteners 7
Ledger Attachment 8
Lateral Load Connection 9
Footings 10
Post Bases 12
Beam-to-Post Connections 13
Joists Terminating into Beam/Ledger 14
Joists Bearing on a Beam 15
Railing Post-to-Deck Framing 16
Stair Stringers & Treads 17
Fastening Deck Boards 18

A Word About Building Codes

This guide recommends connectors and fasteners for deck construction that may meet the requirements of the 2006 International Building Code® and the 2006 International Residential Code®. The information contained here is a summary of the requirements of these codes as they pertain to the connections highlighted in this guide. The building codes contain other requirements regarding aspects of deck construction that are not addressed here, check the codes for details. Check with your local building department to verify what building codes have been adopted in your area.

Selection of products based upon performance and/or suitability for a specific application should be made by a qualified professional. Simpson Strong-Tie recommends that deck designs are approved by the local building department before construction begins.

International Building Code and International Residential Code are registered trademarks of their respective organizations.

LIMITED WARRANTY

Simpson Strong-Tie Company Inc. warrants catalog products to be free from defects in material or manufacturing. Simpson Strong-Tie Company Inc. products are further warranted for adequacy of design when used in accordance with design limits in this catalog and when properly specified, installed, and maintained. This warranty does not apply to uses not in compliance with specific applications and installations set forth in this catalog, or to non-catalog or modified products, or to deterioration due to environmental conditions.

Simpson Strong-Tie® connectors are designed to enable structures to resist the movement, stress, and loading that results from impact events such as earthquakes and high velocity winds. Other Simpson Strong-Tie products are designed to the load capacities and uses listed in this catalog. Properly-installed Simpson Strong-Tie products will perform in accordance with the specifications set forth in the applicable Simpson Strong-Tie catalog. Additional performance limitations for specific products may be listed on the applicable catalog pages.

Due to the particular characteristics of potential impact events, the specific design and location of the structure, the building materials used, the quality of construction, and the condition of the soils involved, damage may nonetheless result to a structure and its contents even if the loads resulting from the impact event do not exceed Simpson Strong-Tie catalog specifications and Simpson Strong-Tie connectors are properly installed in accordance with applicable building codes.

All warranty obligations of Simpson Strong-Tie Company Inc. shall be limited, at the discretion of Simpson Strong-Tie Company Inc., to repair or replacement of the defective part. These remedies shall constitute Simpson Strong-Tie Company Inc.'s sole obligation and sole remedy of purchaser under this warranty. In no event will Simpson Strong-Tie Company Inc. be responsible for incidental, consequential, or special loss or damage, however caused.

This warranty is expressly in lieu of all other warranties, expressed or implied, including warranties of merchantability or fitness for a particular purpose, all such other warranties being hereby expressly excluded. This warranty may change periodically – consult our website *www.strongtie.com* for current information.

Cover image courtesy Arch Chemicals, Inc.

F-DECKCODE09 ©2009 SIMPSON STRONG-TIE COMPANY INC.

Improperly Built Decks Can Be Dangerous

> **Decks cause more injuries and loss of life than any other part of the home structure.**
>
> —***Don Bender***, *Director, Wood Materials and Engineering Laboratory, Washington State University*

More than a million decks are built and replaced each year in the United States. While decks are a popular feature of many homes, the construction and safety of decks have become a real concern within the building industry. Improper deck building has resulted in a growing number of deck failures and related injuries and deaths.

According to Don Bender, the director of the Wood Materials and Engineering Laboratory at Washington State University, the deck is the most dangerous part of the house. Washington State Magazine's article *Making Decks Safer* reports "Decks cause more injuries and loss of life than any other part of the home structure. Except for hurricanes and tornadoes, more injuries may be connected to deck failures than all other wood building components and loading cases combined."

While decks are required to meet certain code standards and load capacities, it's estimated that of the 40 million existing decks, only half are code compliant – leaving 20 million decks that need to be rebuilt or retrofitted.

To help design and building professionals build code-compliant, safe decks, Simpson Strong-Tie® has created this *Deck Framing Connection Guide*. This guide focuses on the critical connections involved in deck construction and what the code requires for these areas. It is intended to help designers, contractors, inspectors and do-it-yourselfers ensure that their decks are properly constructed per the International Building Code® (IBC) and International Residential Code® (IRC). The guide includes a complete deck connector system that covers all the hardware needs for deck construction and references the code to ensure it meets current requirements.

Do Decks Really Need to Meet Code Requirements?

Because they look relatively simple to build, many people do not realize that decks are structures that need to be designed to adequately resist certain stresses. Like a house, or any other building, a deck must be designed to support the weight of people and objects placed on them, as well as lateral and uplift loads that can act on the deck as a result of wind or seismic activity. The 2006 versions of both the IBC and IRC contain language outlining the general design requirements of structures. This excerpt from the 2006 IRC (Section R301.1) represents a summary of the intent of both codes:

"The construction of buildings and structures in accordance with the provisions of this code shall result in a system that provides a complete load path that meets all requirements for the transfer of all loads from their point of origin through the load-resisting elements to the foundation."

The concept of a complete or continuous load path refers to a series of solid connections within the structure of a deck that transfer load through its frame to the ground or adjacent, supporting structure *(commonly a building)*. This same principle is applied to the design of all types of wood frame buildings. This continuous load path is created by using a system of structural connectors and fasteners to connect the wood members together.

F-DECKCODE09 ©2009 SIMPSON STRONG-TIE COMPANY INC.

Critical Deck Connections

A system of key connections throughout the deck framing, also known as a continuous load path, is essential to building a safe, code-compliant deck. When this system of connections is made properly, loads are transferred throughout the deck's frame and into the ground and/or the adjacent structure to which the deck is connected.

The connections called out below are necessary in order to create an effective continuous load path.

For information on the inspection of existing decks, see page 5.

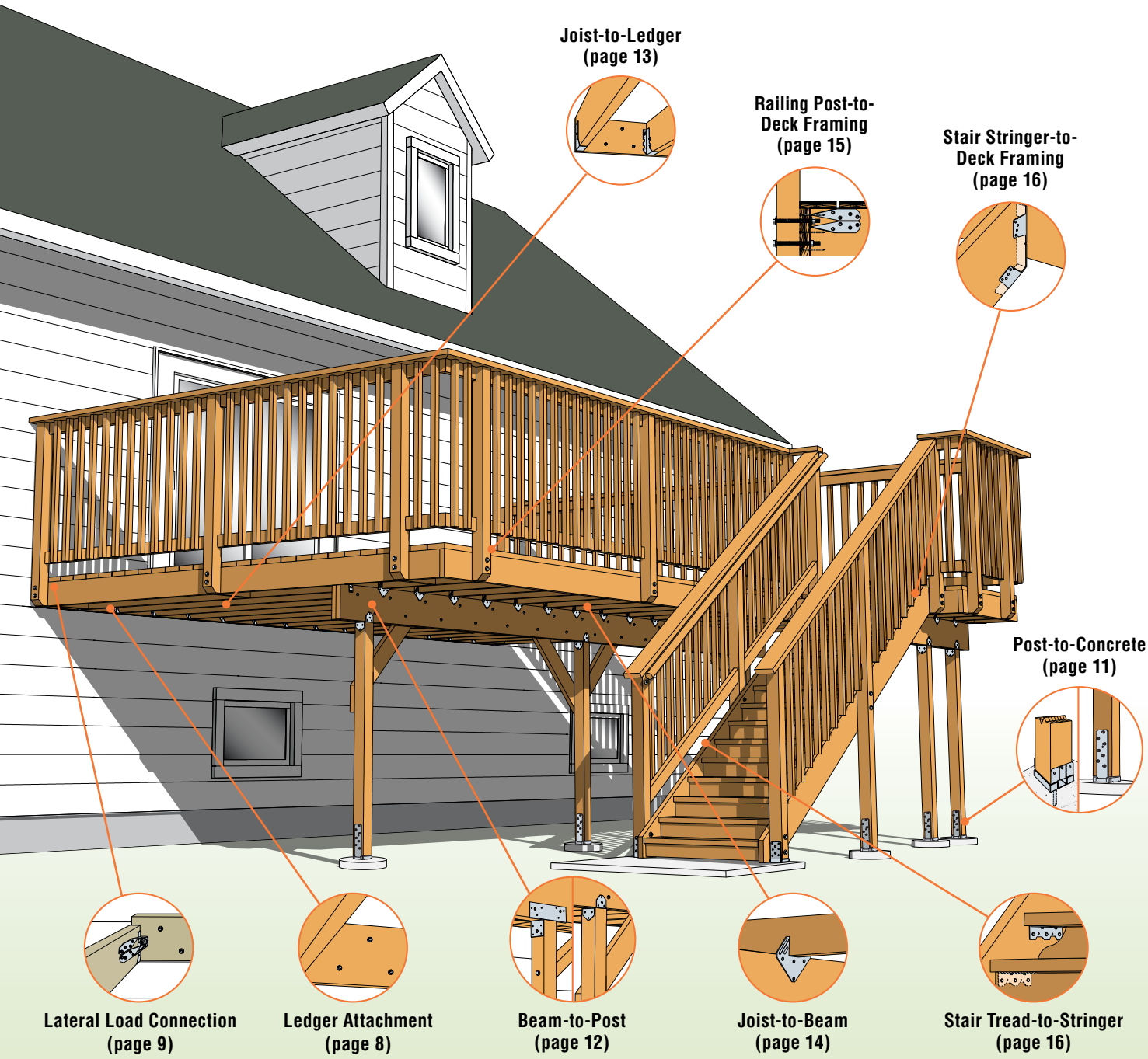

F-DECKCODE09 ©2009 SIMPSON STRONG-TIE COMPANY INC.

Existing Decks: Retrofit Or Replace?

Do I Need To Retrofit?

5 Things to Look for On an Existing Deck

When inspecting a deck to determine overall safety and compliance to building codes, look at the following five areas:

1. **Missing/Improper Connections:** Any connections that do not meet the requirements discussed in this guide can compromise the safety of the deck. In many cases toenailing does not constitute a proper connection. Connectors must be installed with the correct fastener.

2. **Loose Connections:** Depending on how the deck was built, vital connections may have degraded over time due to various factors. Issues such as wobbly railings, loose stairs and ledgers that appear to be pulling away from the adjacent structure are all causes for concern.

3. **Corrosion of Connectors and Fasteners:** Metal connectors and fasteners can corrode over time, especially if a product with insufficient corrosion resistance was originally installed. See page 6 for more information on corrosion.

4. **Rot:** Wood can rot and degrade over time with exposure to the elements. Members within the deck frame that have rotted may no longer be able to perform the function for which they were installed.

5. **Cracks:** As wood ages it is common for cracks to develop. Large cracks or excessive cracking overall can weaken deck framing members.

Retrofitting an Existing Deck

It is estimated that of the 40 million existing decks, only half are code-compliant. Experts believe that it is likely that many of these decks are potentially unsafe. In situations where it is not feasible to rebuild an existing deck, it may be preferable to retrofit it by applying hardware to existing framing members. Many of the products shown in this guide may be installed after deck framing is in place and can improve the safety of the structure and help bring it within the requirements of the code.

The Life Expectancy of Decks

Most experts agree that the average life expectancy of a deck is 10 to 15 years. Since deck building started over 30 years ago, there are many existing decks that are past their useful life. Deck maintenance is often overlooked as well. Decks are exposed to the elements, which can cause damage. It's important that decks are properly inspected and maintained on a routine basis. If unsure, it's best to consult with a professional, such as a structural engineer or contractor, to make sure the deck is safe.

Connector Solutions for Retrofitting

The following connectors are some of the products that may be suitable for deck retrofit. Selection of products based upon performance and/or suitability for a specific application should be made by a qualified professional. Simpson Strong-Tie recommends that deck designs be approved by the local building department before work begins.

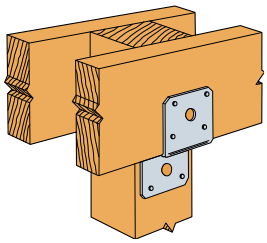

DJT: Connects beams at the side of the post.

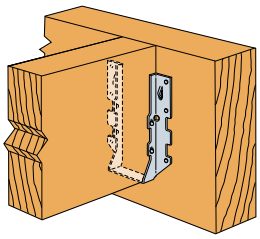

LUS Joist Hanger: Provides bearing and uplift resistance, features double-shear nailing for added strength.

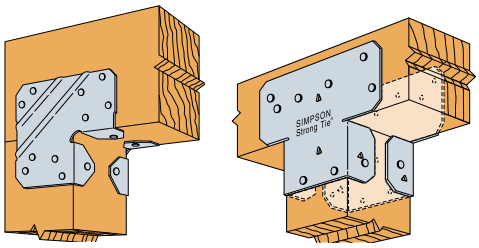

LCE/AC Retrofit Post Caps: Two-piece cap may be installed before or after lumber is in place.

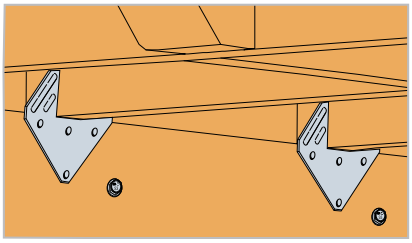

H1 Hurricane Tie: Holds joist on both sides.

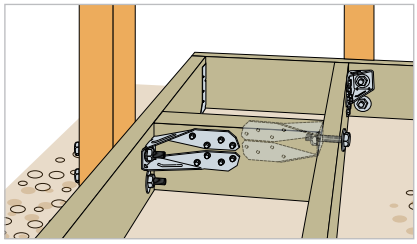

DTT Deck Tension Tie: Horizontal application fastening railing post to deck framing.

F-DECKCODE09 ©2009 SIMPSON STRONG-TIE COMPANY INC.

Selecting Connectors & Fasteners

Corrosion Issues

When selecting hardware or fasteners for deck construction it is important to use connectors with a level of corrosion resistance appropriate to the application.

Outdoor environments are generally more corrosive to steel because connectors are exposed to the elements. If building a deck in an area especially prone to moisture, such as homes along the coast or near bodies of water, the risk of corrosion is much higher. In addition, the chemicals used in some preservative-treated woods have been found to increase the corrosion of connectors and fasteners. Other corrosion risk factors include exposure to fire retardants, fumes, fertilizers, soil, industrial zones, acid rain, and other corrosive elements.

Depending on the deck materials and environmental conditions, Simpson Strong-Tie® ZMAX® coated (G185) and hot-dip galvanized (HDG) connectors and fasteners may provide adequate corrosion resistance. If you choose to use ZMAX or HDG on your deck project, you should periodically inspect your connectors and fasteners or have a professional inspection performed. Regular maintenance including water-proofing of the wood used to construct your deck is also a good practice. When using ZMAX/HDG connectors, you must use fasteners galvanized per ASTM A153 or SDS screws with a double-barrier coating.

For higher exposure applications, stainless-steel connectors and fasteners offer the best defense against corrosion. Simpson Strong-Tie offers a variety of connectors and fasteners for deck construction in stainless steel. Remember when using stainless- steel connectors, you must also use stainless-steel fasteners.

Use the chart below, which was created based on Simpson Strong-Tie testing and experience, to select the connector finish or material suitable for various types of preservative-treated wood.

Simpson Strong-Tie recommendations are as follows:

Low = Use standard painted and G90 galvanized connectors, or Simpson Strong-Tie® Strong-Drive® screws (SDS) with the double-barrier coating, as a minimum.

Med = Use ZMAX/HDG galvanized connectors as a minimum. Use HDG fasteners which meet the specifications of ASTM A153 or Simpson Strong-Tie® Strong-Drive® screws (SDS) with double-barrier coating.

High[6] = Use Type 303, 304, 305 or 316 stainless-steel connectors and fasteners.

CONNECTOR COATING RECOMMENDATION – STRUCTURAL APPLICATIONS

Environment	Untreated Wood	SBX/ DOT & Zinc Borate	MCQ	ACQ-C, ACQ-D (Carbonate), CA-B & CBA-A			ACZA	Other or Uncertain
				No Ammonia	With Ammonia	Higher Chemical Content[1]		
Interior – Dry	Low	Low	Low[5]	Med[5]	Med	High	High	High
Exterior – Dry	Low	N/A[2]	Med	Med	High	High	High	High
Exterior – Wet	Med	N/A[2]	Med[3,4]	Med[3,4]	High	High	High	High
Higher Exposure	High	N/A[2]	High	High	High	High	High	High
Uncertain	High	N/A[2]	High	High	High	High	High	High

1. Woods with actual retention levels greater than 0.40 pcf for ACQ and MCQ, 0.41 pcf for CBA-A, or 0.21 pcf for CA-B (Ground Contact level).
2. Borate treated woods are not appropriate for outdoor use.
3. Test results indicate that ZMAX®/HDG and the SDS double-barrier coating will perform adequately, subject to regular maintenance and periodic inspection. However, the nationally-approved test method used, AWPA E12-94, is an accelerated test, so data over an extended period of time is not available. If uncertain, use stainless steel.
4. Some treated wood may have excess surface chemicals making it potentially more corrosive. If you suspect this or are uncertain, use stainless steel.
5. Where noted in the table, applications where the wood is dry *(moisture content less than 19%)* when installed and will remain dry in-service may use a minimum coating recommendation of "Low".
6. Type 316 stainless-steel connectors and fasteners are the minimum recommendation for ocean-salt air and other chloride environments.

For more information on corrosion and selecting the appropriate finish for your application visit ***www.strongtie.com/info***.

Coatings Available

Not all products are available in all finishes. Contact Simpson for product availability, ordering information and lead times.

Finish	Description	Level of Corrosion Resistance
Gray Paint	Water-based paint intended to protect the product while it is warehoused and in transit to the jobsite.	Low
Powder Coating	Baked on paint finish that is more durable than our standard paint and produces a better looking finished product.	Low
Standard G90 Zinc Coating	Zinc galvanized finish containing 0.90 oz. of zinc per square foot of surface area (total both sides).	Low
ZMAX G185	Galvanized (G185) 1.85 oz. of zinc per square foot of surface area *(hot-dip galvanized per ASTM A653 total both sides)*. These products require hot-dip galvanized fasteners *(fasteners galvanized per ASTM A153)*.	Medium
HOT DIP HDG GALVANIZED	Products are hot-dip galvanized after fabrication (14 ga. and thicker). The coating weight increases with material thickness. The minimum specified coating weight is 2.0 oz./ft^2 *(per ASTM A123 total both sides)*. These products require hot-dip galvanized fasteners *(fasteners galvanized per ASTM A153)*.	Medium
Double-Barrier Coating *(SDS Screws)*	Simpson Strong-Tie® Strong-Drive® screws (SDS) that are manufactured with two different finishes that provide a level of corrosion protection equivalent to that provided by the previous HDG finish.	Medium
SS 300 STAINLESS STEEL	Products manufactured from Type 316L stainless steel, and provide greater durability against corrosion. Stainless-steel nails are required with stainless-steel products, and are available from Simpson Strong-Tie.	High

F-DECKCODE09 ©2009 SIMPSON STRONG-TIE COMPANY INC.

Stainless-Steel Connectors & Fasteners

Stainless-Steel Connectors for Higher Exposure Environments

Stainless-steel connectors are the best bet against corrosion in higher-exposure applications. The additional chromium in stainless steel results in a thin coat of chromium oxide on the surface of the metal which insulates the connector from corrosive attack. Whether it's exposure to weather, salt air or contact with preservative-treated wood, stainless-steel connectors and fasteners maintain performance and appearance longer than galvanized-steel connectors. It is important to use the correct stainless-steel fasteners with stainless-steel connectors. Simpson Strong-Tie offers a wide range of connectors and fasteners made from grade 316 stainless steel for deck framing and other construction projects.

For complete information on these products see the Simpson Strong-Tie® *Wood Construction Connectors* catalog or visit **www.strongtie.com**.

Contact Simpson Strong-Tie for information on special order stainless-steel connectors.

Stainless-Steel Connectors

Model No.	Description	Suitable Simpson Strong-Tie® Stainless-Steel Fasteners
Joist Hangers		
LUC26SS	Concealed flange for 2x6, 2x8 joist	6-SS16D to header, 4-SSN10 to joist
LUC210SS	Concealed flange for 2x10, 2x12 joist	10-SS16D to header, 6-SSN10 to joist
LUS26SS	For 2x6, 2x8 joist	4-SS10D to header, 4-SS10D to joist
LUS210SS	For 2x10, 2x12, 2x14 joist	8-SS10D to header, 4-SS10D to joist
LUS26-2SS	For double 2x6, 2x8 joist	4-SS16D to header, 4-SS16D to joist
LUS28SS	For 2x8, 2x10 joist	6-SS10D to header, 4 - SS10D to Joist
LUS28-2SS	LUS28-2SS	6-SS16D to header, 4 - SS16D to Joist
LUS210-2SS	For double 2x10, 2x12 joist	8-SS16D to header, 6-SS16D to joist
LUS36SS	For 3x6, 3x8 joist	4-SS16D to header, 4 - SS16D to joist
SUL26SS	Skewed 45° left, for 2x6, 2x8 joist	6-SS16D to header, 6-SSN10 to joist
SUR26SS	Skewed 45° right, for 2x6, 2x8 joist	6-SS16D to header, 6-SSN10 to joist
SUL210SS	Skewed 45° left, for 2x10, 2x12 joist	10-SS16D to header, 10-SSN10 to joist
SUR210SS	Skewed 45° right, for 2x10, 2x12 joist	10-SS16D to header, 10-SSN10 to joist
Post Caps		
AC4SS	For 4x post	14-SS16D to beam, 14-SS16D to post
ACE4SS	For 4x post	10-SS16D to beam, 10-SS16D to post
LCE4SS	For 4x or 6x post	14-SS16D to beam, 10-SS16D to post
AC6SS	For 6x post	14-SS16D to beam, 14-SS16D to post
ACE6SS	For 6x post	10-SS16D to beam, 10-SS16D to post
BC4SS	For 4x post	6-SS16D to beam/deck, 6-SS16D to post
BCS2-2/4SS	2-2x's to a 4x post	8-SS10D to beam, 6-SS10D to post
BCS2-3/6SS	3-2x's to a 6x post	12-SS16D to beam, 6-SS16D to post
DJT14SS	Deck joist tie	8-SS16D or 2-⅝" SS MB's
Post/Column Bases		
ABU44SS[3]	For 4x4 post	12-SS16D or 2-½" SS MB's to post (⅝" anchor dia)
ABU46SS[3]	For 4x6 post	12-SS16D or 2-½" SS MB's to post (⅝" anchor dia)
ABU66SS[3]	For 6x6 post	12-SS16D or 2-½" SS MB's to post (⅝" anchor dia)
BC40SS	For 4x4 post	6 - SS16D to post, 4 - SS16D in base bottom
CB44SS	For 4x4 post	2-⅝" SS MB's to post
CB46SS	For 4x6 post	2-⅝" SS MB's to post
CB66SS	For 6x6 post	2-⅝" SS MB's to post
Hurricane Tie (Joist to Beam)		
H2.5SS	Hurricane tie	5-SSN8 to Joist, 5-SSN8 to beam
H2SS	Hurricane tie	5-SSN8 to joist, 5 - SSN8 to beam
H3SS	Hurricane tie	4-SSN8 to joist, 4 - SSN8 to beam
H4SS	Hurricane tie	4-SSN8 to joist, 4 - SSN8 to beam
H5SS	Hurricane tie	4-SSN8 to joist, 4 - SSN8 to beam
H8SS	Hurricane tie	5-SSN10 to joist, 5 - SSN10 to beam
H10SS	Hurricane tie	8-SSN8 to joist, 8 - SSN8 to beam
Framing Angles		
A34SS	Multi-purpose angle	8-SSN8 total
A35SS	Multi-purpose angle	12-SSN8 total
TA9SS	Staircase angle	5-¼x1½" SS Lag Screws total[1]
TA10SS	Staircase angle	7-¼x1½" SS Lag Screws total[1]
LS50SS	Skewable angle	8-SS10D
Straps/Ties		
LTS12SS	90° Light twist strap, 12" long	12-SS10D
LTS18SS	90° Light twist strap, 18" long	12-SS10D
MSTA12SS	12" Multi-purpose strap	10-SS10D
MSTA18SS	18" Multi-purpose strap	14-SS10D
MSTA24SS	24" Multi-purpose strap	18-SS10D
MSTA36SS	36" Multi-purpose strap	26-SS10D
MTS20SS	90° Medium twist strap, 20" long	14-SS10D
RFB#5X8SS	5/8"x 8" Retrofit bolt for adhesive anchoring	Use with Epoxy-Tie and Acrylic-Tie adhesives
Simpson Strong-Tie® Stainless-Steel Nails		
SSN8	(8d) 0.131 x 1½" Smooth shank	
SS8D	(8d) 0.131 x 2½" Smooth shank	
SSN10	(10d) 0.148 x 1½" Smooth shank	
SS10D	(10d) 0.148 x 3" Smooth shank	
SS16D	(16d) 0.162 x 3½" Smooth shank	

1. Load values shown in the Simpson Strong-Tie® *Wood Construction Connectors* catalog for the TA9SS and TA10SS do not apply when installed with stainless-steel lag screws. Contact Simpson Strong-Tie for more information.
2. Contact Simpson Strong-Tie for additional stainless-steel solutions.
3. Refer to page 12 for stainless-steel, post-installed anchor solutions.

F-DECKCODE09 ©2009 SIMPSON STRONG-TIE COMPANY INC.

Ledger Attachment

Code Requirements

✔ Where supported by attachment to an exterior wall, decks shall be positively anchored to the primary structure and designed for both vertical and lateral loads as applicable. Such attachment shall not be accomplished by the use of toenails or nails subject to withdrawal.

IRC 2006 Section R502.2.2
IBC 2006 Section 1604.8.3

✔ The lag screws or bolts shall be placed 2" from the bottom or top of the deck ledgers and between 2"-5" in from the ends. The lag screws or bolts shall be staggered from the top to the bottom along the horizontal run of the deck ledger.

IRC 2009 Section R502.2.2.1.1

✔ Deck ledger connections not conforming to Table R502.2.2.1 shall be designed in accordance with accepted engineering practice. Girders supporting deck joists shall not be supported on deck ledgers or band joists. Deck ledgers shall not be supported on stone or masonry veneer.

IRC 2009, Section R502.2.2.2.

Selection of products based upon performance and/or suitability for a specific application should be made by a qualified professional. Simpson Strong-Tie recommends that deck designs be approved by the local building department before construction begins.

Correct ledger attachment is crucial when building a deck that is attached to another structure. One of the most common causes for deck failure are ledgers that pull away from the primary structure, resulting in complete collapse.

Simpson Strong-Tie® Solution

The Simpson Strong-Tie® Strong-Drive® screw (SDS) is a ¼" diameter structural wood screw that is suitable for installing ledgers and meets the requirements of the building codes. It installs easily and does not require predrilling. The SDS screw is available with a hot-dip galvanized finish or the new double-barrier coating. Both finishes are suitable for outdoor and some preservative-treated wood applications *(see page 6 for details)*.

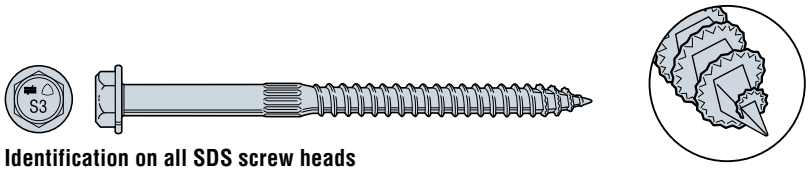

Identification on all SDS screw heads

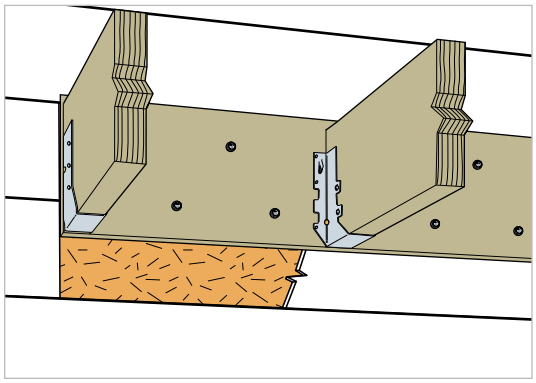

Ledger may not be installed over siding or stucco. It must be fastened directly to the rim joist or sheathing.

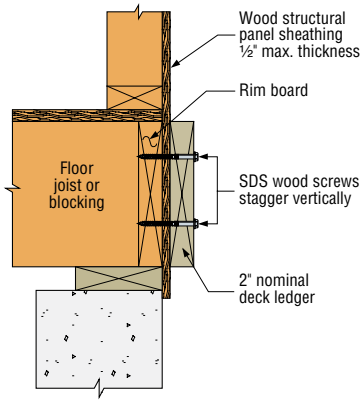

Ledger to rim board assembly

Design/Installation Guidelines

It is important that an engineer or other qualified professional evaluates the design of the deck to determine the specific number of fasteners and their spacing for any specific deck installation. Contact Simpson Strong-Tie for prescriptive ledger attachment solutions equivalent to Table R502.2.21 of the 2009 IRC. For designed solutions the following installation requirements must be met in order for the Strong-Drive® screw to achieve allowable load values published in the Simpson Strong-Tie® *Wood Construction Connectors* catalog:

1. Screws must be installed into a rim board with sufficient thickness.
2. Screws can be installed over sheathing provided it is structural sheathing *(OSB or plywood)*.
3. Rim board must be at least 1½" thick or a reduction to the catalog loads is required.
4. Minimum of 3" long screws must be used *(plus the thickness of any structural sheathing that remains in place)*.
5. Ledger may not be installed over siding or stucco, it must be fastened directly to the rim joist or sheathing.

F-DECKCODE09 ©2009 SIMPSON STRONG-TIE COMPANY INC.

Lateral Load Connection

For decks that are partially supported by an adjacent structure, the connection between the deck and that structure is vital. A bolted or screwed ledger-to-rim board connection is suitable to support gravity loads, however in some cases the building codes require a connection that is able to resist higher lateral loads. In these situations tension ties are typically called out to tie the joists of the deck directly to the joists of the structure.

The Simpson Strong-Tie® DTT2Z Deck Tension Tie complies with new IRC requirements for laterally tying the deck to the house. The DTT2Z fastens easily to the joist using Simpson Strong-Tie® Strong Drive® screws *(included)*.

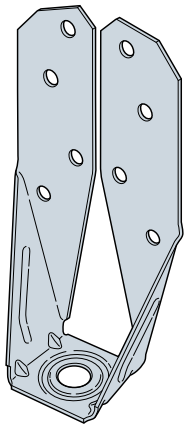

The DTT2Z Deck Tension Tie is a multi-purpose connector ideal for lateral load and deck-post connections. It features a ZMAX® coating for added corrosion resistance.

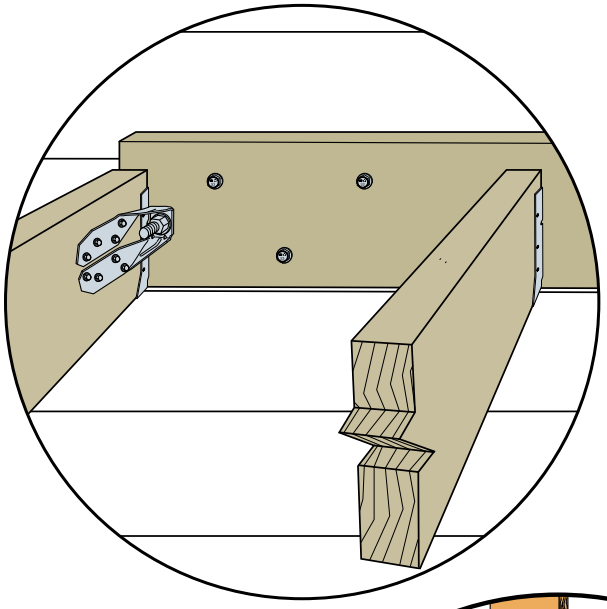

Deck to Ledger Installation Detail

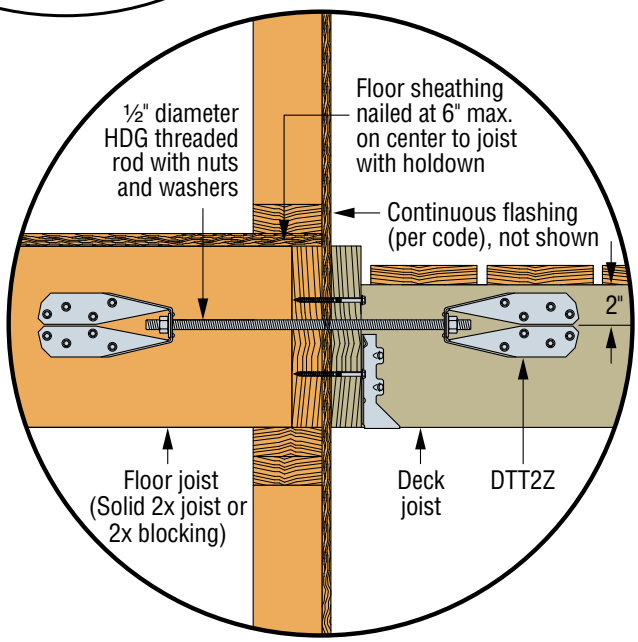

Deck to Ledger Installation Section View

Code Requirements

✔ The lateral load connection required by Section R502.2.2 shall be permitted to be in accordance with Figure R502.2.2.3. Hold-down tension devices shall be provided in not less than two locations per deck, and each device shall have an allowable stress capacity of not less than 1500 lbs.

IRC 2009 Section R502.2.2.3

Selection of products based upon performance and/or suitability for a specific application should be made by a qualified professional. Simpson Strong-Tie recommends that deck designs be approved by the local building department before construction begins.

These products are available with a ZMAX® or hot-dip galvanized coating. Stainless-steel connectors are also available for higher exposure environments or applications using certain preservative-treated woods. See page 6 for more details.

F-DECKCODE09 ©2009 SIMPSON STRONG-TIE COMPANY INC.

Footings

Code Requirements

FOOTINGS

✔ The building codes include specific requirements regarding footing size that are dependent upon factors such as the dead and live loads the deck is designed to resist as well as soil conditions. Footing should be designed per *IRC 2006, Section R403 or IBC 2006, Section 1805*

Minimum Footing Depths By Code

(See the codes for actual footing size required.)

✔ Footings shall be at least 12" below the undisturbed ground surface.

IRC 2006, Section R403.1.4
IBC 2006, Section 1805.2

✔ Footings shall be designed so that the allowable bearing capacity of the soil is not exceeded. The minimum width of footings shall be 12 inches.

IRC 2006, Section R403.1.1
IBC 2006, Section 1805.4.1

Note: In order to achieve published load values, footings must provide sufficient concrete cover of the embedded portion of Simpson Strong-Tie® cast-in-place post and column bases. In some cases a footing larger than the minimum required by the building codes will be necessary to meet these requirements. See the Simpson Strong-Tie® *Wood Construction Connectors* catalog for more information.

In order for posts to properly resist various types of loads they must be supported by, and anchored to, concrete footings. Patios and pre-cast concrete piers do not qualify as proper footings for deck construction.

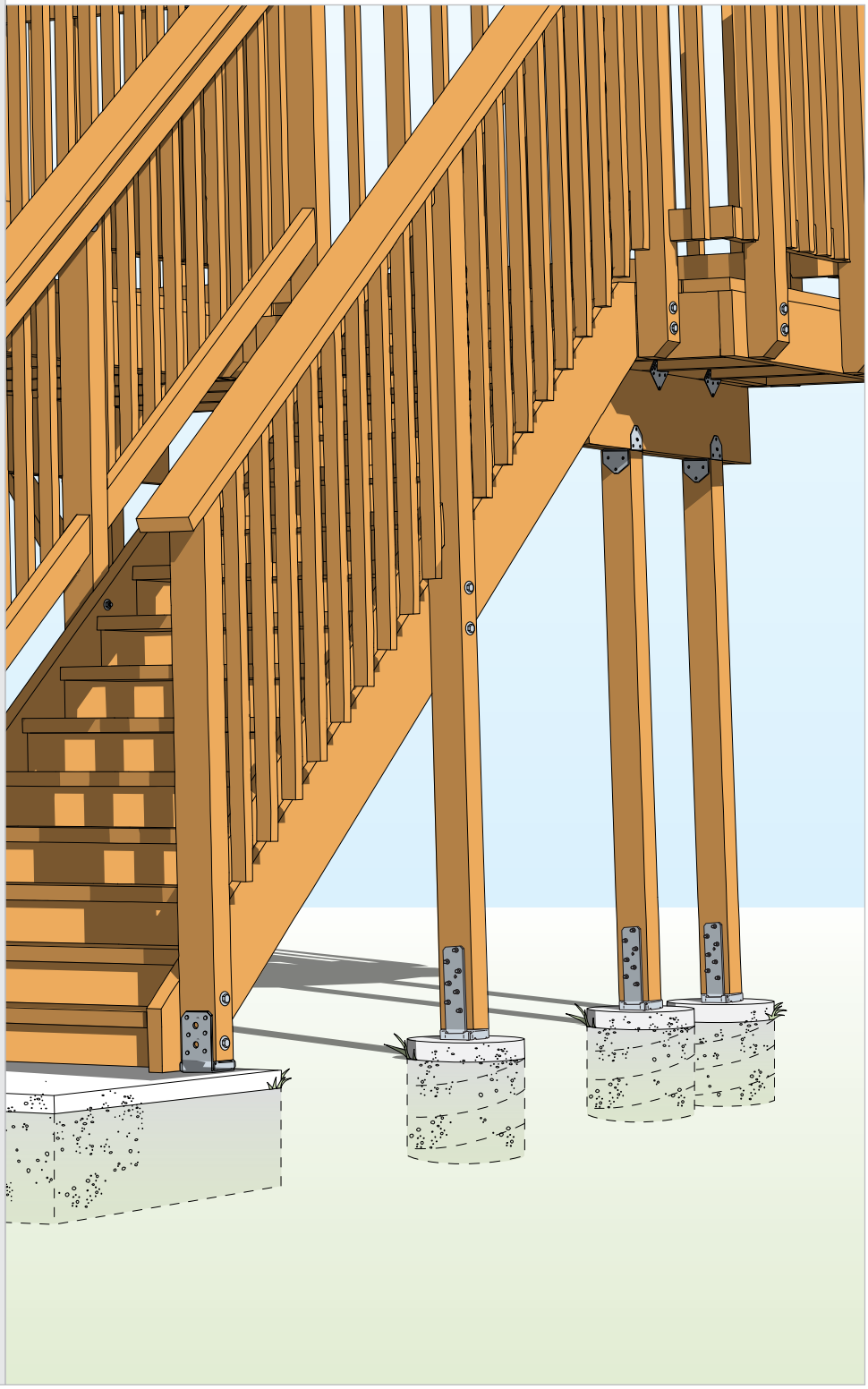

F-DECKCODE09 ©2009 SIMPSON STRONG-TIE COMPANY INC.

Post Bases

Posts must be correctly attached to a concrete footing in order to resist lateral and uplift loads. Unless they are naturally decay-resistant or preservative-treated wood, they must also be elevated off the concrete by 1" to help prevent decay at the end of the post due to moisture.

Simpson Strong-Tie® Solutions

Cast-in-place

These products are cast into the concrete at the time of the pour.

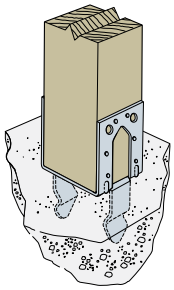

PB Post Base: For use with decay resistant or preservative-treated wood. ZMAX® or hot-dip galvanized coating recommended.

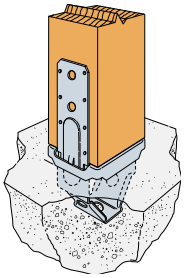

PBS Post Base with Standoff: Features a 1" standoff. ZMAX® or hot-dip galvanized coating recommended.

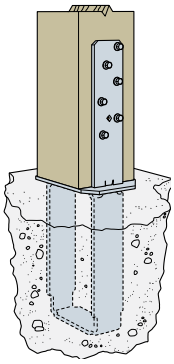

CBQ Column Base: Installs with SDS wood screws. Hot-dip galvanized coating recommended.

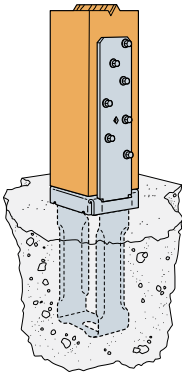

CBSQ Column Base: Installs with SDS wood screws and features a 1" standoff. Hot-dip galvanized coating recommended.

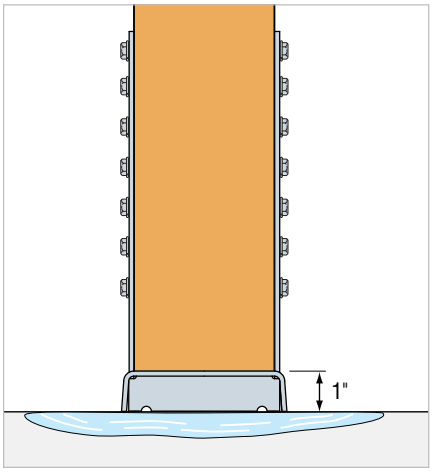

A 1" standoff at the base of the post is required when building with wood that is not preservative treated or decay resistant. The standoff plate raises the post end off the concrete, keeping it drier and reducing the chances of decay. For best long-term results, Simpson Strong-Tie recommends that a base with a standoff be used in exterior-wet applications.

Code Requirements

Load Resistance

- ✔ Columns shall be restrained to prevent lateral displacement at the bottom end. Wood columns shall not be less in nominal size than 4" x 4".

  IRC 2006, Section R407.3

- ✔ Column and post-end connections shall be fastened to resist lateral and net induced uplift forces.

  IBC 2006, Section 2304.9.7

Decay Resistance of Post

- ✔ Wood columns shall be of an approved wood with natural decay resistance or approved preservative-treated wood. Exception: Columns exposed to the weather that are supported by a metal pedestal projecting 1" above the concrete and 6" above exposed earth.

  IRC 2006, Section R319.1
  IBC 2006, Section 2304.11

Selection of products based upon performance and/or suitability for a specific application should be made by a qualified professional. Simpson Strong-Tie recommends that deck designs be approved by the local building department before construction begins.

These products are available with a ZMAX® or hot-dip galvanized coating. Stainless-steel connectors are also available for higher exposure environments or applications using certain preservative-treated woods. See page 6 for more details.

Post Bases

Code Requirements

Load Resistance

- ✔ Columns shall be restrained to prevent lateral displacement at the bottom end. Wood columns shall not be less in nominal size than 4" x 4".

  IRC 2006, Section R407.3

- ✔ Column and post-end connections shall be fastened to resist lateral and net induced uplift forces.

  IBC 2006, Section 2304.9.7

Decay Resistance of Post

- ✔ Wood columns shall be of an approved wood with natural decay resistance or approved preservative-treated wood. Exception: Columns exposed to the weather that are supported by a metal pedestal projecting 1" above the concrete and 6" above exposed earth.

  IRC 2006, Section R319.1
  IBC 2006, Section 2304.11

Selection of products based upon performance and/or suitability for a specific application should be made by a qualified professional. Simpson Strong-Tie recommends that deck designs be approved by the local building department before construction begins.

These products are available with a ZMAX® or hot-dip galvanized coating. Stainless-steel connectors are also available for higher exposure environments or applications using certain preservative-treated woods. See page 6 for more details.

Simpson Strong-Tie® Solutions

Post-installed

These products utilize anchor bolts installed during the pour or after the concrete hardens.

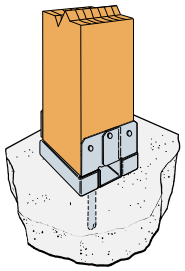

ABA Adjustable Post Base with Standoff: Offers adjustability to account for imperfect bolt placement as well as a 1" standoff. Available with a ZMAX® galvanized coating.

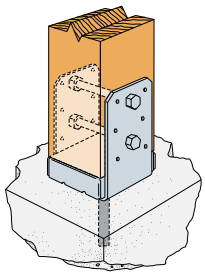

ABU Adjustable Post Base with Standoff: Offers adjustability, a 1" standoff and increased uplift loads. ZMAX® coating or stainless steel recommended.

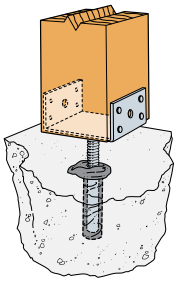

EPB44PHDG Elevated Post Base: Installs with Epoxy-Tie® or Acrylic-Tie® adhesives, incorporates a 1" standoff and offers vertical adjustability of the post. Hot-dip galvanized coating recommended.

Post-Installed Anchors

Installing a post base on hardened concrete requires the installation of a post-installed anchor to attach the base to the concrete. Simpson Strong-Tie offers a variety of mechanical anchors and anchoring adhesives that are code listed for structural applications.

Mechanical Anchors: Wedge-All® Wedge Anchors

The Wedge-All wedge anchor is ideal for installing post bases on hardened concrete. Drill the hole, drive the anchor and tighten the nut to set the anchor. A one-piece expansion clip ensures uniform holding capacity that increases as tension is applied. Mechanically-galvanized coating or stainless steel recommended.

Anchoring Adhesives

Anchoring adhesives are ideal when maximum strength is needed or when anchoring close to the edge of concrete or masonry. Simpson Strong-Tie SET Epoxy-Tie® is a high-strength epoxy adhesive and Acrylic-Tie® is an acrylic formula ideal for fast cure and cold-weather applications. Both products are available in a variety of cartridge sizes, including convenient single-tube cartridges. Hot-dip galvanized or stainless-steel threaded rod recommended.

For more information on these products see the Simpson Strong-Tie Anchor Systems® *Anchoring and Fastening Systems for Concrete and Masonry* catalog or visit **www.simpsonanchors.com**.

F-DECKCODE09 ©2009 SIMPSON STRONG-TIE COMPANY INC.

Beam-to-Post Connections

At the point where a beam meets a post, it must be properly connected to the post in order to resist gravity, lateral and uplift loads. This pertains to solid sawn beams or those comprised of multiple members, whether they rest on top or are fastened to the side of the post.

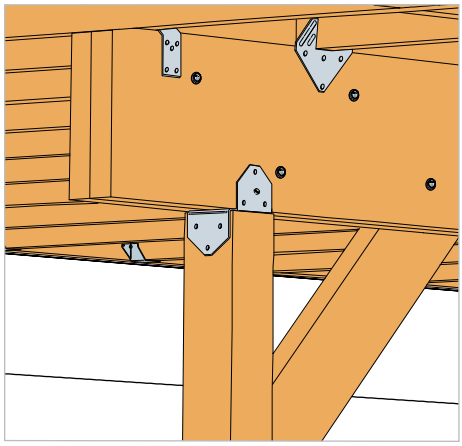

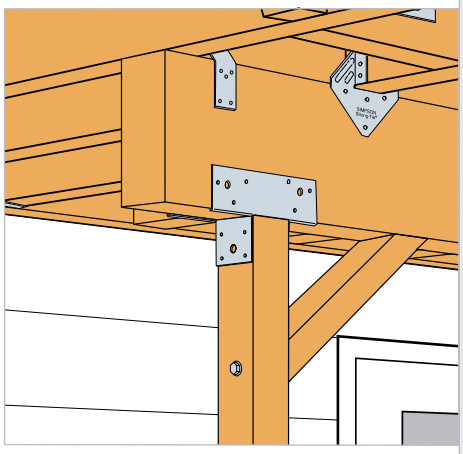

Simpson Strong-Tie® Solutions

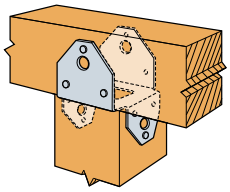

BC Post Cap: For single-member solid sawn beams. ZMAX® coating or stainless steel recommended.

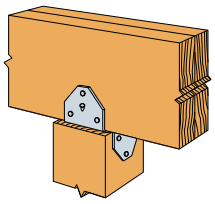

BCS Post Cap: Connects double 2x's to a 4x post or triple 2x's to a 6x post. ZMAX® coating or stainless steel recommended.

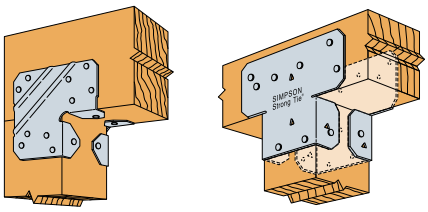

LCE/AC Retrofit Post Caps: Two-piece cap may be installed before or after lumber is in place when the sides of the post and beam are flush. ZMAX® coating or stainless steel recommended.

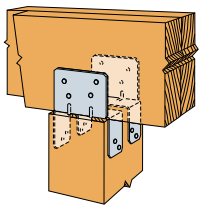

LPC Post Cap: Two-piece cap adjusts for beams smaller than post width. Features a ZMAX® galvanized coating.

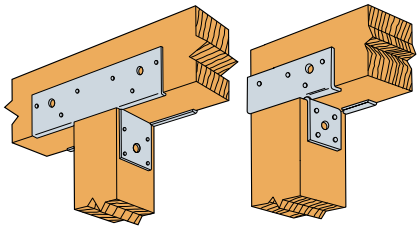

PC/EPC Post Caps: Connects beams at the top of the post. ZMAX® galvanized coating recommended.

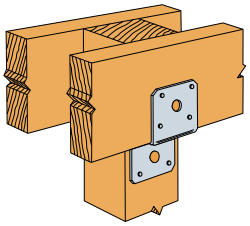

DJT14: Connects beams at the side of the post. ZMAX® coating or stainless steel recommended.

Code Requirements

✔ Where posts and beam or girder construction is used to support floor framing, positive connections shall be provided to ensure against uplift and lateral displacement.

IRC 2006, Section R502.9
IBC 2006, Section 2304.9.7

Selection of products based upon performance and/or suitability for a specific application should be made by a qualified professional. Simpson Strong-Tie recommends that deck designs be approved by the local building department before construction begins.

These products are available with a ZMAX® or hot-dip galvanized coating. Stainless-steel connectors are also available for higher exposure environments or applications using certain preservative-treated woods. See page 6 for more details.

F-DECKCODE09 ©2009 SIMPSON STRONG-TIE COMPANY INC.

Joists Terminating into Beam/Ledger

Code Requirements

Bearing

✔ The ends of each joist, beam or girder shall have at least 1½" of bearing on wood or metal except where supported on a 1"x4" ribbon strip nailed to adjacent studs.

IRC 2006, Section R502.6
IBC 2006, Section 2308.8.1

✔ Joists framing into the side of a wood beam shall be supported by approved framing anchors or on ledger strips not smaller than 2"x2".

IRC 2006, Section 502.6.2
IBC 2006, Section 2308.8.2

Cantilevered Applications

✔ Decks with cantilevered framing members, connections to exterior walls or other framing members shall be designed and constructed to resist uplift resulting from the full live load acting on the cantilevered portion of the deck.

IRC 2006, Section 502.2.2
IBC 2006, Section 1604.8.3

Selection of products based upon performance and/or suitability for a specific application should be made by a qualified professional. Simpson Strong-Tie recommends that deck designs be approved by the local building department before construction begins.

ZMAX® G185 · HDG HOT DIP GALVANIZED® · SST300 STAINLESS STEEL®

These products are available with a ZMAX® or hot-dip galvanized coating. Stainless-steel connectors are also available for higher exposure environments or applications using certain preservative-treated woods. See page 6 for more details.

When joists terminate into a beam or ledger, a connection is required to provide bearing. In cantilever applications the connection must also resist uplift.

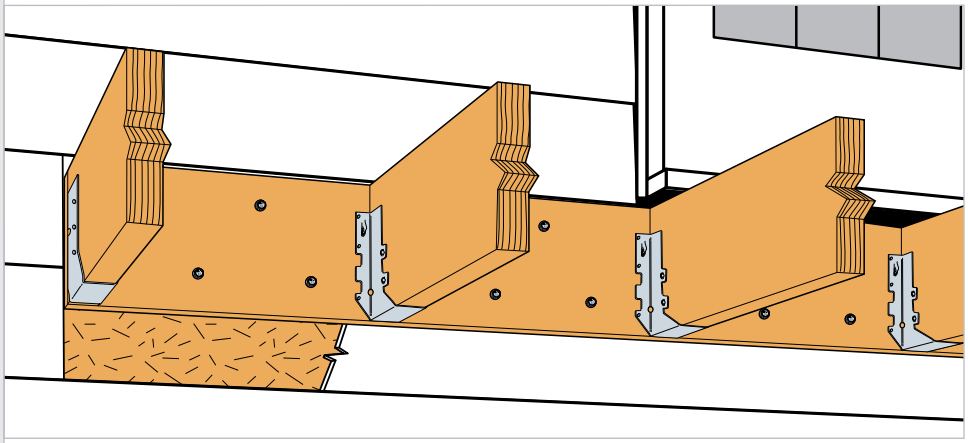

Ledger may not be installed over siding or stucco. It must be fastened directly to the rim joist or sheathing.

Simpson Strong-Tie® Solutions

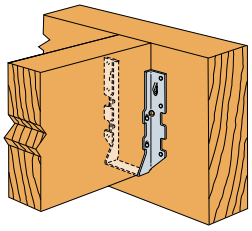

LUS Joist Hanger: Provides bearing and uplift resistance, features double-shear nailing for added strength. ZMAX® coating or stainless steel recommended.

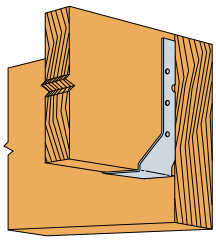

LUC Concealed Flange Joist Hanger: Provides bearing and uplift resistance, concealed flanges for cleaner look and for end conditions. ZMAX® coating or stainless steel recommended.

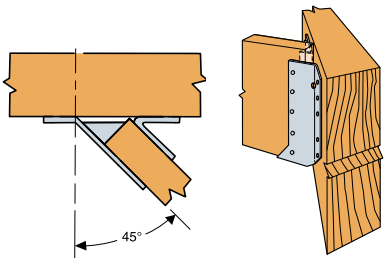

SUR/SUL Skewed Joist Hanger: 45° skewed hanger *(available in skewed right and left versions)*, provides bearing and uplift resistance. ZMAX® coating or stainless steel recommended.

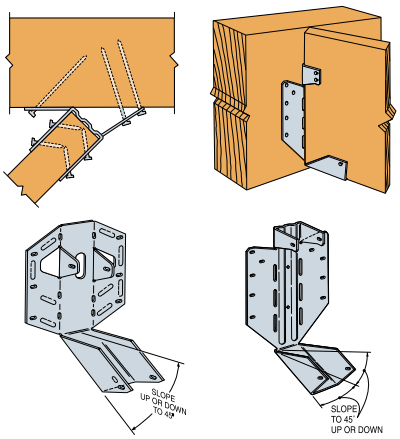

LSU26/LSSU210 Field Skewable Joist Hanger: Field skewable right or left up to 45°, provides bearing and uplift resistance. Also field slopeable up or down to 45°. Available with a ZMAX® galvanized coating.

F-DECKCODE09 ©2009 SIMPSON STRONG-TIE COMPANY INC.

Joists Bearing on a Beam

At the point where the joist bears on top of a beam, there must be a connection to resist lateral and uplift forces. Blocking or framing is also required to prevent overturning of the joists.

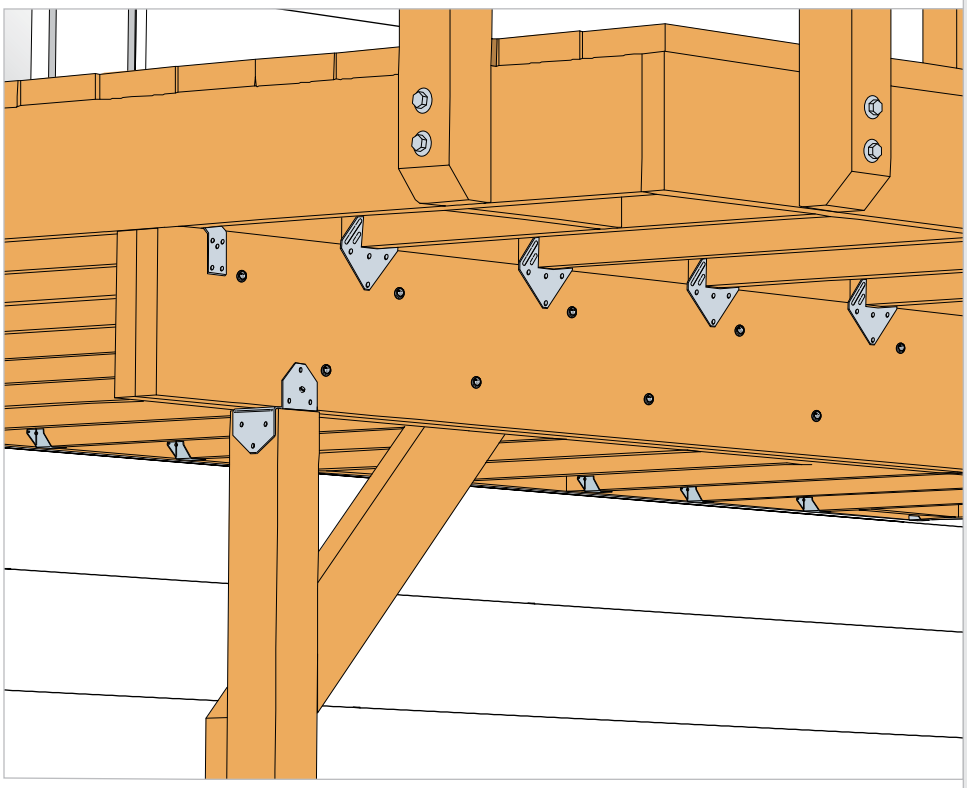

Simpson Strong-Tie® Solutions

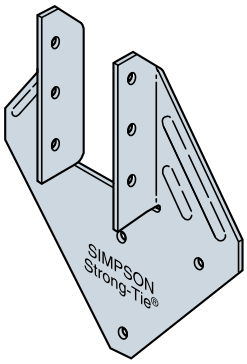

H1 Hurricane Tie: Holds joist on both sides. ZMAX® galvanized coating recommended.

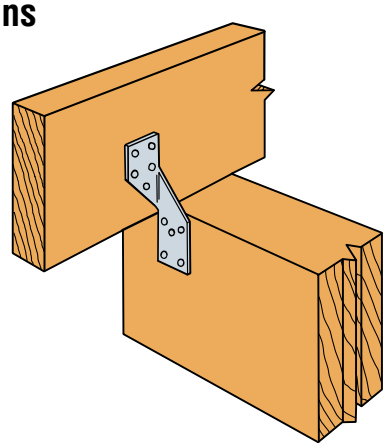

H2.5 Hurricane Tie: Suitable for single-sided applications. ZMAX® galvanized coating or stainless steel recommended.

Simpson Strong-Tie offers a full range of hurricane ties for all types of applications and load requirements. See the Simpson Strong-Tie® *Wood Construction Connectors* catalog for more information.

Code Requirements

- ✔ Where posts and beam or girder construction is used to support floor framing, positive connections shall be provided to ensure against uplift and lateral displacement.

  IRC 2006, Section R502.9
  IBC 2006, Section 2304.9.7

- ✔ Joists must be supported laterally at the ends by solid blocking or attachment to a full depth header, band or rim joist (IRC & IBC). Lateral restraint must be provided at each support (IRC only).

  IRC 2006 Section R502.7
  IBC 2006 Section 2308.8.2

Selection of products based upon performance and/or suitability for a specific application should be made by a qualified professional. Simpson Strong-Tie recommends that deck designs be approved by the local building department before construction begins.

These products are available with a ZMAX® or hot-dip galvanized coating. Stainless-steel connectors are also available for higher exposure environments or applications using certain preservative-treated woods. See page 6 for more details.

F-DECKCODE09 ©2009 SIMPSON STRONG-TIE COMPANY INC.

Railing Post-to-Deck Framing

Code Requirements

When required

✔ Guards shall be located along many surfaces more than 30" above the floor or grade below including porches, balconies, raised floor areas, stairways, landings and open-sided walking surfaces.

IRC 2006, Section R312.1
IBC 2006, Section 1013.1

Height

✔ Guards shall be a minimum of 36" tall (IRC) or up to 42" tall for certain occupancies (IBC).

IRC 2006, Section R312.1
IBC 2006, Section 1013.2

Load Resistance

✔ Handrail assemblies and guards shall be able to resist a single concentrated load of 200 pounds, applied in any direction at any point along the top.

IRC 2006, Table R301.5
IBC 2006, Section 1607.7.1

Selection of products based upon performance and/or suitability for a specific application should be made by a qualified professional. Simpson Strong-Tie recommends that deck designs be approved by the local building department before construction begins.

These products are available with a ZMAX® or hot-dip galvanized coating. Stainless-steel connectors are also available for higher exposure environments or applications using certain preservative-treated woods. See page 6 for more details.

The railing connection is one of the more crucial connections pertaining to safety, and it is often inadequately constructed. In order to provide the required load resistance at the hand rail, the post must not only be fastened to the rim joist, but also tied back into the joist framing. Machine bolts through the post and rim joist alone do not typically meet the performance requirements of the code. The details below have been shown through testing to resist the forces called out by the codes.

Simpson Strong-Tie® Solutions

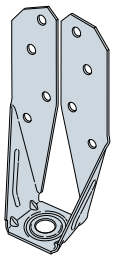

DTT2Z Deck Tension Tie: Features a ZMAX® galvanized coating.

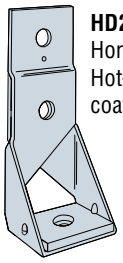

HD2A Holdown: Horizontal application. Hot-dip galvanized coating recommended.

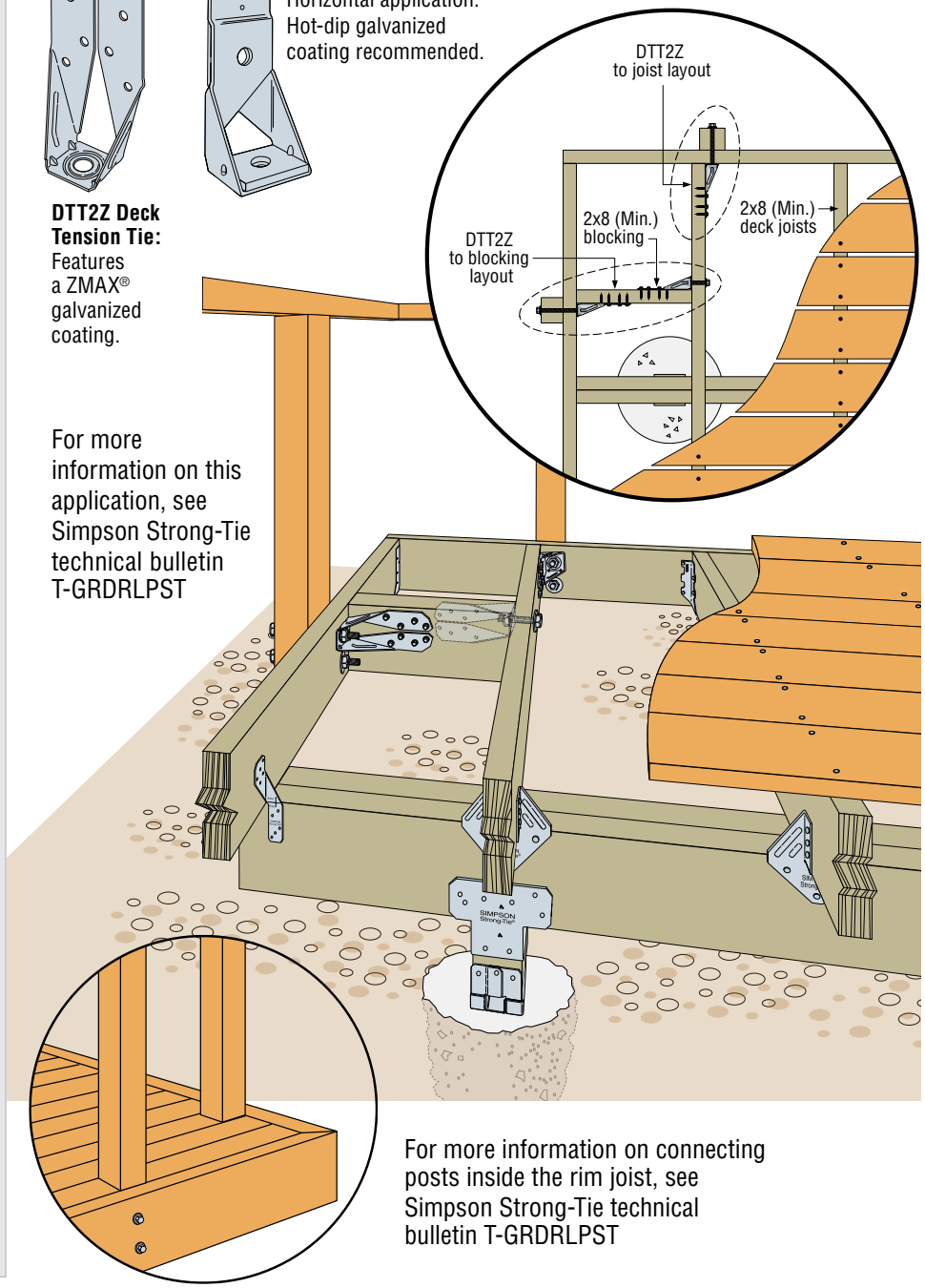

For more information on this application, see Simpson Strong-Tie technical bulletin T-GRDRLPST

For more information on connecting posts inside the rim joist, see Simpson Strong-Tie technical bulletin T-GRDRLPST

F-DECKCODE09 ©2009 SIMPSON STRONG-TIE COMPANY INC.

Stair Stringers & Treads

Stair stringers must be properly connected to the deck, and treads properly connected to the stringers, in order to resist loads. In addition, code requirements regarding openings between stair treads and stair railing must also be met.

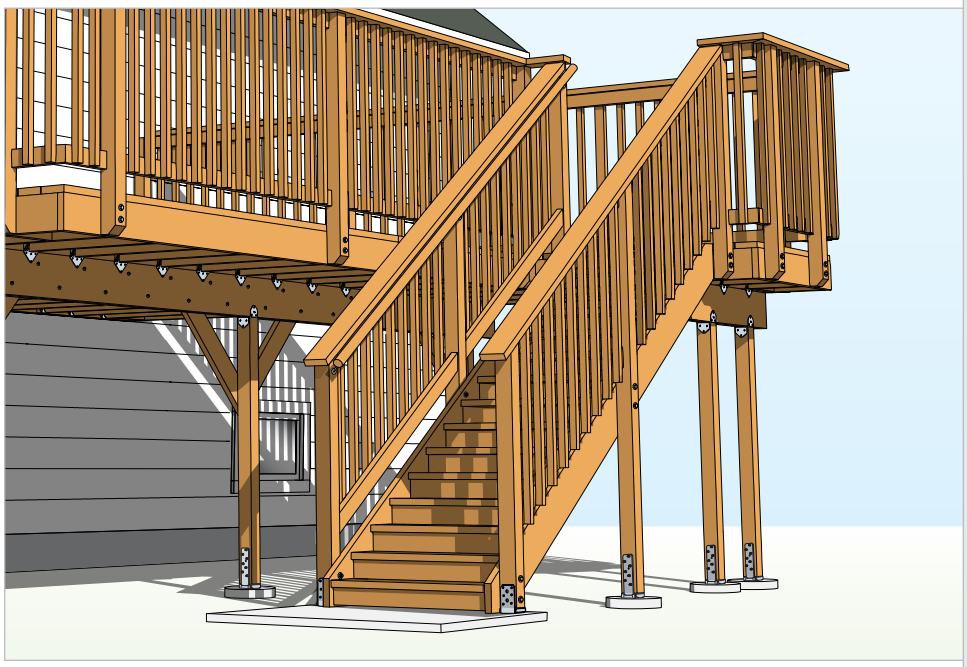

Simpson Strong-Tie® Solutions

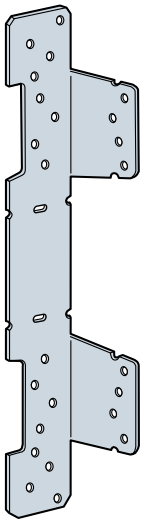

Available
Fall 2009

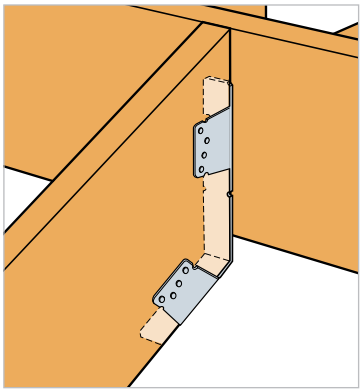

LSCZ Adjustable Stair Stringer Connector: Field slopable to almost any angle, the LSCZ is ideal for for attaching the staircase stringer to the deck. Suitable for solid and notched stringers. Features a ZMAX® galvanized coating.

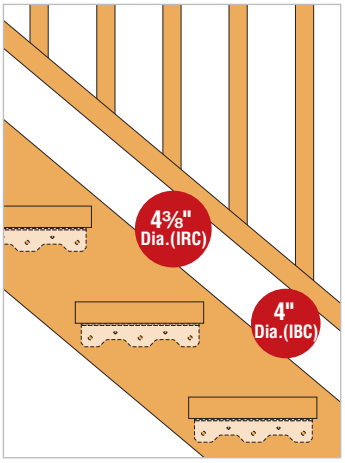

Codes require that a 4⅜" (IRC) or 4" (IBC) sphere must not be able to pass between any guard opening at stairs. Using the TA makes it easier to meet these requirements.

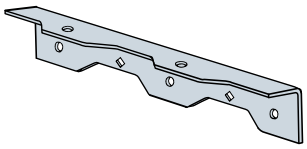

TA Staircase Angle: Provides a positive connection, eliminating the need to notch the stringer. A full-width stringer is stronger and makes it easier to meet maximum guardrail opening requirements of the codes. ZMAX® coating or stainless steel recommended.

Code Requirements

Stair Stringer to Rim Joist

✔ Staircases must be able to resist 40 pounds per square foot of tread area.

IRC 2006, Table R301.5
IBC 2006, Table 1607.1
(1 and 2 family dwellings)

Stair Tread to Stringer

✔ Individual stair treads shall be able to resist a 300 lb. concentrated load acting over an area of 4 square inches.

IRC 2006, Table R301.5
IBC 2006, Table 1607.1
(1 and 2 family dwellings)

Railing to Stringer Opening:

✔ Guard openings shall not allow passage of a 4" sphere. Exceptions: The triangular opening formed by the riser, tread and bottom rail of a guard at the open side of a stairway shall be of such a size that a sphere 6" in diameter cannot pass through.

IRC 2006 Section R312.2
IBC 2006 Section 1013.3

Additional IRC 2006 Exception: Openings for required guards on the sides of stair treads shall not allow a sphere 4⅜" to pass through.

IRC 2006 Section R312.2

Selection of products based upon performance and/or suitability for a specific application should be made by a qualified professional. Simpson Strong-Tie recommends that deck designs be approved by the local building department before construction begins.

These products are available with a ZMAX® or hot-dip galvanized coating. Stainless-steel connectors are also available for higher exposure environments or applications using certain preservative-treated woods. See page 6 for more details.

F-DECKCODE09 ©2009 SIMPSON STRONG-TIE COMPANY INC.

Fastening Deck Boards

Quik Drive® Auto-Feed Screw Fastening System

Quik Drive® auto-feed screw driving systems provide the performance benefits of screws along with a fast and efficient installation method. Screws are widely considered to be the best way to fasten decking material due to the holding power of the threads. Nails typically pull out over time, leaving the head protruding above the decking. In addition, many manufacturers of composite decking material recommend screws to fasten their products. Quik Drive® offers a full range of collated screws for use with a wide variety of decking materials.

Screws for Fastening Decking

DCL/SSDCL "Composi-Lok" Series
Available in four colors and stainless steel

SS3DSCB Series
305 and 316 stainless steel #10

WSNTLG Series
N2000® coating

SSDTH Series
305 stainless steel, #8 trim head

DTHQ Series
Trim head, Quik Guard® coating

For more information, request the *Quik Drive® Auto-Feed Screw Driving Systems* catalog or visit **www.strongtie.com/products/quikdrive**.

Stainless-Steel Fasteners for All Types of Decking

Simpson Strong-Tie is proud to welcome Swan Secure to the Simpson Strong-Tie family. With the integration of Swan Secure, we are able to offer the industry's most extensive line of high-quality stainless steel fasteners. Stainless steel is the best bet when you need long-term performance from a fastener in higher exposure applications such as coastal construction. Whether you need screws for composite or hardwood materials or hand-drive nails for cedar decking, we have the right stainless-steel fastener for the job.

Hand-Drive and Collated Nails
Grade 304 and 316 stainless steel
Also available with painted heads

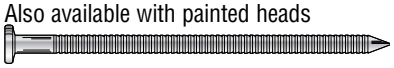

Dexxter Composite Decking Screw
Installs easily with no mushrooming

For more information see the *Specialized Fasteners* catalog or visit **www.strongtie.com**.

Swaneze Wood Decking Screw
Various head styles, drives and painted heads available

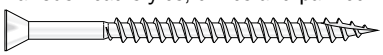

Woodpeckers Hard Wood Decking Screw
Designed for easy installation into hard woods like Ipê

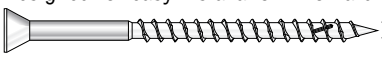

Deck Spacers™

Deck Spacers are small plastic spacers that easily clip onto deck joists during installation to ensure evenly spaced deck boards, enabling quicker installation and reducing labor costs. Deck Spacers are ideal for composite decking and help meet manufacturer warranty requirements. They stay on the joist permanently to help shed debris and moisture off of deck joists for easier wet or dry cleaning. For more information request flier Simpson Strong-Tie F-DECKSPCR.

Features:

- Provides permanent deck board spacing
- Quickly and easily snap into place
- Meet composite decking warranty requirements for spacing
- UV materials last the life of deck
- 3 colors to match decking: Gray, Brown and Tan

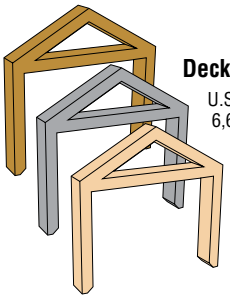

Deck Spacers
U.S. Patent 6,647,638

F-DECKCODE09 ©2009 SIMPSON STRONG-TIE COMPANY INC.

Fastening Deck Boards

EB-TY® Hidden Deck Fastener

The EB-TY biscuit provides a unique method of fastening deck boards that makes the fasteners virtually invisible. Fastening is done into the side of the board, leaving a fastener-free deck surface.

The EB-TY is a polypropylene biscuit fastener that fits into a slot on the edge of the deck boards. The EB-TY fasteners are inserted and fastened with a screw driven into the joist. Nesting each successive board against the EB-TY automatically ensures consistent spacing and uniform height.

- Easy to install since all fastening is done from the top side
- Affords easier deck resurfacing since nail heads are eliminated from the deck surface
- Suitable for pre-grooved decking or the builder can cut grooves with a biscuit joiner
- Formed from UV resistant polypropylene to last the life of the deck
- Stainless steel #7 trim-head screws included
- Each carton includes installation instructions and enough EB-TY fasteners, screws and tapered Ipe wood plugs to install 100 square feet of decking (assuming 6" wide boards, installed perpendicular to joists spaced 16" on center)

EBTYMI

EBTYP

EBTYJR

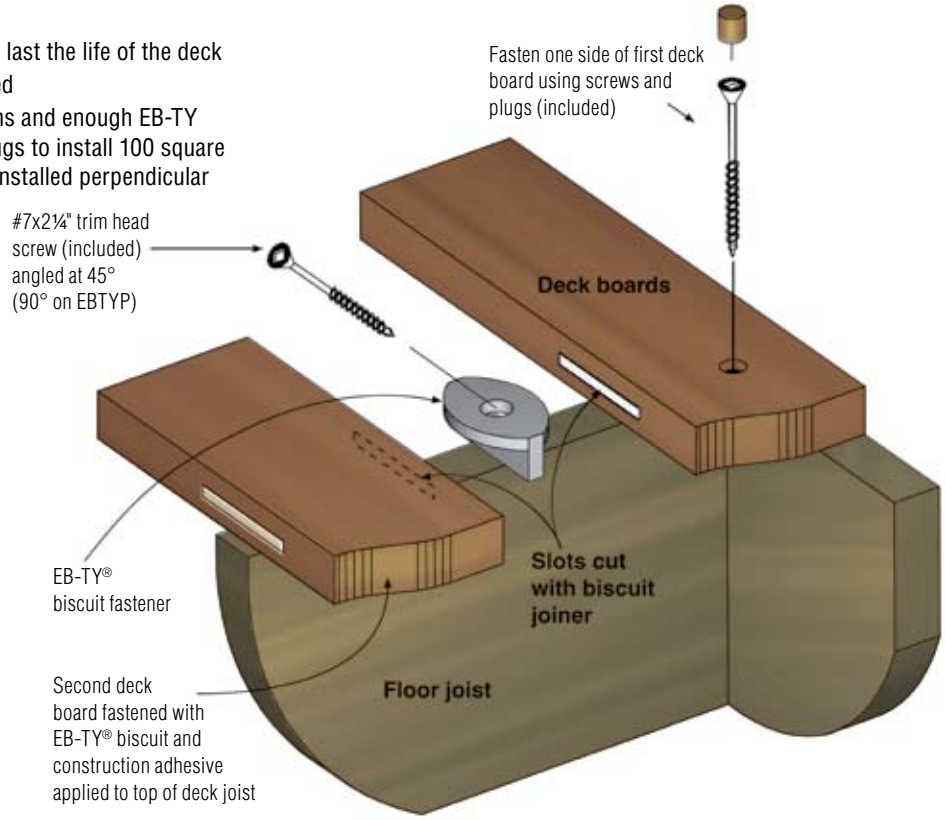

DBT1Z Deck-Board Tie

The DBT deck board tie is an innovative solution for fastening decking that leaves a fastener-free surface. Enjoy the look of the deck without noticing the nail or screw heads. Since all fastening is done from the side countersinking and hammer dents are not an issue. Over the life of the deck there will be no protruding nail heads to step on or rust stains. And when it is time to refinish the deck, the lack of fasteners makes sanding and refinishing easier.

- No visible fasteners on the deck surface
- Installs easily using a hammer and nails
- Suitable for 2x and 5/4 deck boards or composite deck boards a minimum of 1" thick (some pre-drilling may be required with some decking)

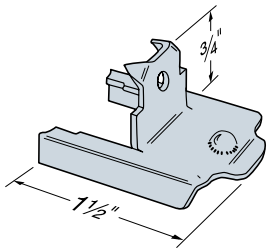

DBT1Z

U.S. Patent 5,027,573
Canada Patent 2,015,733

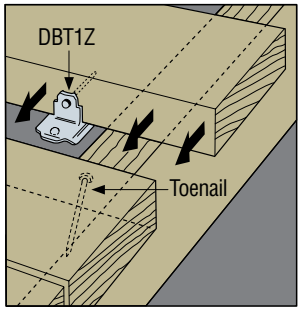

Typical DBT1Z Installation
Connectors slide under anchored deck board.

F-DECKCODE09 ©2009 SIMPSON STRONG-TIE COMPANY INC.

SIMPSON Strong-Tie®

Sell More Decks with DeckTools™!

Show your clients photo-realistic visuals of their dream deck during the sales call.

DeckTools software DT

Customize all aspects of deck details and fixtures with extensive manufacturer and user-supported libraries

Real-time parts and labor estimating

For more information, or a demonstration of DeckTools™ professional deck design software, call 800 999 5099 or visit www.strongtie.com/decktools.

This flier is effective until June 30, 2011, and reflects information available as of April 1, 2009. This information is updated periodically and should not be relied upon after June 30, 2011; contact Simpson Strong-Tie for current information and limited warranty or see www.strongtie.com.

©2009 Simpson Strong-Tie Company Inc. • P.O. Box 10789, Pleasanton, CA 94588

F-DECKCODE09 4/09 exp. 6/11